EH-L36-T0101

Mark	Number Of Places	Content before change	Content after changes	Sign	Year, Month, Day

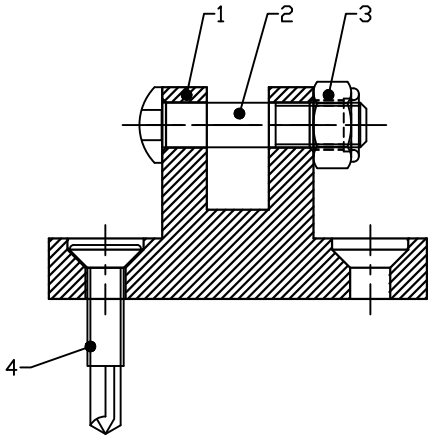

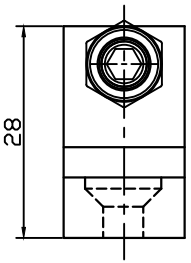

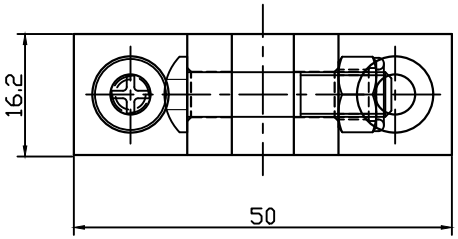

Technical Requirements:

1. The default surface treatment for the bracket body is anodizing. For special requirements, please refer to the specific order.

2. Screws and other accessories conform to national standards; for special requirements, please refer to the specific order.

Applicable type	L36 Series Electric Screw Window Opener
Applicable window type	Regular types
Installation location	Front push rod head
Maximum push-pull force	1000N
Packaging	Bulk, sealed in plastic bags, either with the motor or individually packaged.

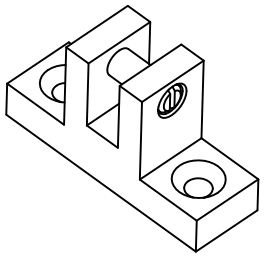

Actual product rendering

S/No.	Product number	Part name	Specifications and models	quantity	Remark
4	210-0418	screw		2	
3	211-0602	nut	External hexagonal anti-loosening M6	1	
2	210-0607	screw	M6×27 (12) mm Internal Hex Head Round Head (Half-Thread)	1	
1	8112-0101131	Bracket	50×28×16mm\T1	1	Note①

Product name	Bracket	Material		surface Treatment	
Product number	9451-0100001	weight	38.9g	D/No:	EH-L36-T0101
Specifications and models	EH-L36-T1	Proportion	1:1		
design		Edition	B1	unit mm P/No. /	Projection
Review					
Approve					

No tolerance noted			
X	±0.3	X	±2°
.X	±0.15	.X	±1°
.XX	±0.05	.XX	±0.5°
.XXX	±0.02		
Unmarked C-angle C0.3		Unmarked R angle R0.3	

* For details not marked with a note, please refer to the 3D image file Path:

EH-L36-T0201

Mark	Number of places	Content before change	Content after changes	Sign	Year, Month, Day

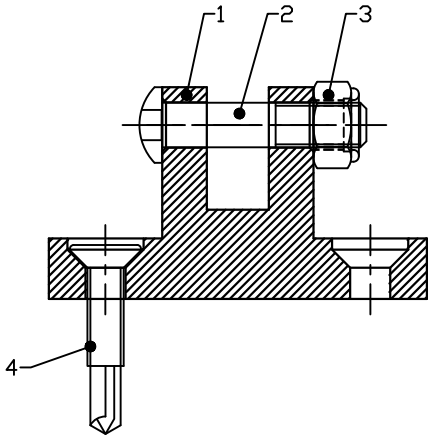

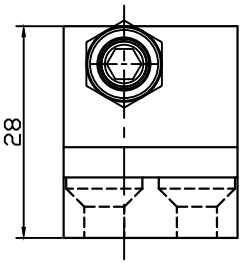

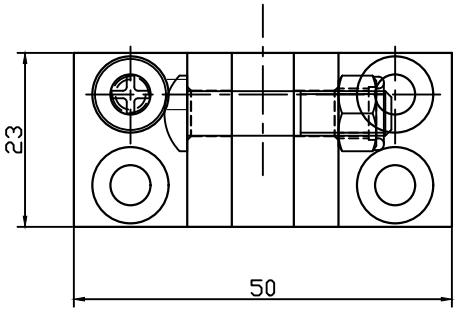

Technical Requirements:

1. The default surface treatment for the bracket body is anodizing. For special requirements, please refer to the specific order.

2. Screws and other accessories conform to national standards; for special requirements, please refer to the specific order.

Applicable type	Electric screw window opener L36/L45 series
Applicable window type	Regular types, window sash frame width ≥ 23mm
Installation location	Front push rod head
Maximum push-pull force	2000N
Packaging	Bulk, sealed in plastic bags, either with the motor or individually packaged.

S/No.	Product number	Part name	Specifications and models	quantity	Remark
4	210-0418	screw	Cross-head countersunk drill bit self-tapping ST4.8-16×25mm	4	
3	211-0602	nut	External hexagonal anti-loosening M6	1	
2	210-0607	screw	M6×27 (12) mm Internal Hex Head Round Head (Half-Thread)	1	
1	8112-0201131	Bracket	50×28×23mm \T2	1	Note①

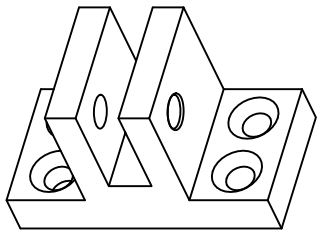

Actual product rendering

Product name	Bracket		Material		surface treatment				
Product number	9451-0200001		weight	54.6g	D/No: EH-L36-T0201				
Specifications and models	EH-L36-T2		Proportion	1:1					
design			Edition	B1	unit	mm	P/No.	/	Projection
Review			-						
Approve									

No tolerance noted	
X ±0.3	X ±2°
.X ±0.15	.X ±1°
.XX ±0.05	.XX ±0.5°
.XXX ±0.02	
Unmarked C-angle C0.3	Unmarked R angle R0.3

* For details not marked with a note, please refer to the 3D image file Path:

EH-L36-T0301

Mark	Number of places	Content before change	Content after changes	Sign	Year, Month, Day

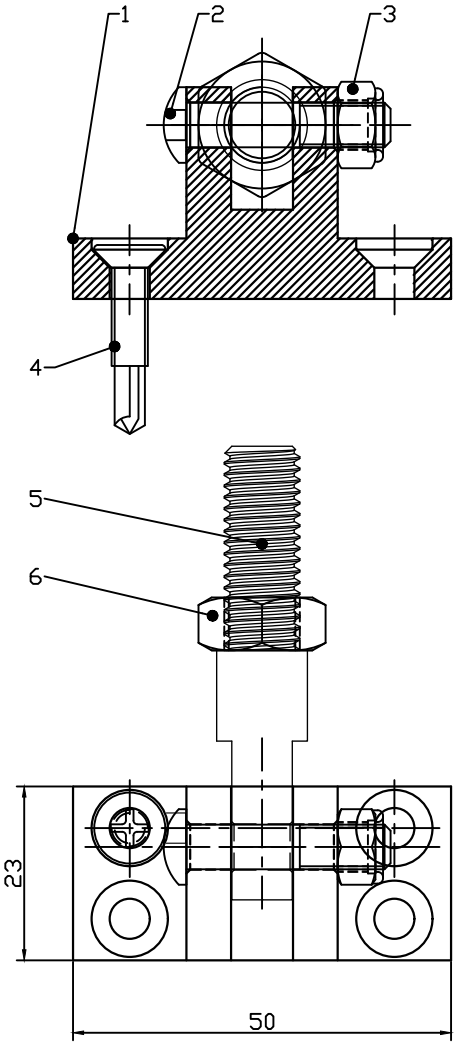

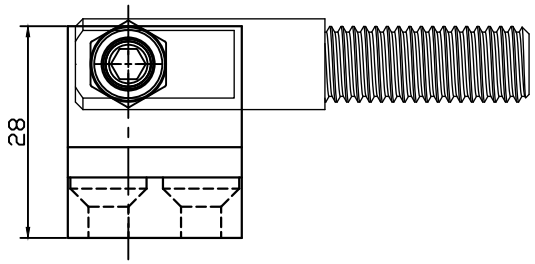

Technical Requirements:

1. The default surface treatment for the bracket body is anodizing. For special requirements, please refer to the specific order.
2. Screws and other accessories conform to national standards; for special requirements, please refer to the specific order.

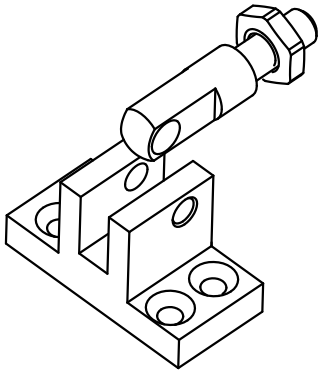

Actual product rendering

Applicable type	Electric screw window opener L36/L45 series
Applicable window type	Regular types, window sash frame width ≥ 23mm
Installation location	Front push rod head
Maximum push-pull force	2000N
Packaging	Bulk, sealed in plastic bags, either with the motor or individually packaged.

S/No.	Product number	Part name	Specifications and models	quantity	Remark
6	211-1001	screw	External hexagon M10	1	
5	239-0002	connecting bolts	φ12×60mm Single-start thread M10×27	1	
4	210-0418	screw	Cross-head countersunk drill bit self-tapping ST4.8-16×25mm	4	
3	211-0602	nut	External hexagonal anti-loosening M6	1	
2	210-0607	screw	M6×27 (12) mm Internal Hex Head Round Head (Half-Thread)	1	
1	8112-0201131	Bracket	50×28×23mm\T2	1	Note①

Product name	Bracket	Material		surface treatment	
Product number	9451-0300001	weight	91.3g	D/No:	EH-L36-T0301
Specifications and models	EH-L36-T3	Proportion	1:1		
design		Edition	B1	unit: mm P/No.: / Projection	
Review					
Approve					

No tolerance noted	
X ±0.3	X ±2°
.X ±0.15	.X ±1°
.XX ±0.05	.XX ±0.5°
.XXX ±0.02	
Unmarked C-angle C0.3	Unmarked R angle R0.3

* For details not marked with a note, please refer to the 3D image file Path:

EH-L36-T0401

Mark	Number of places	Content before change	Content after changes	Sign	Year, Month, Day

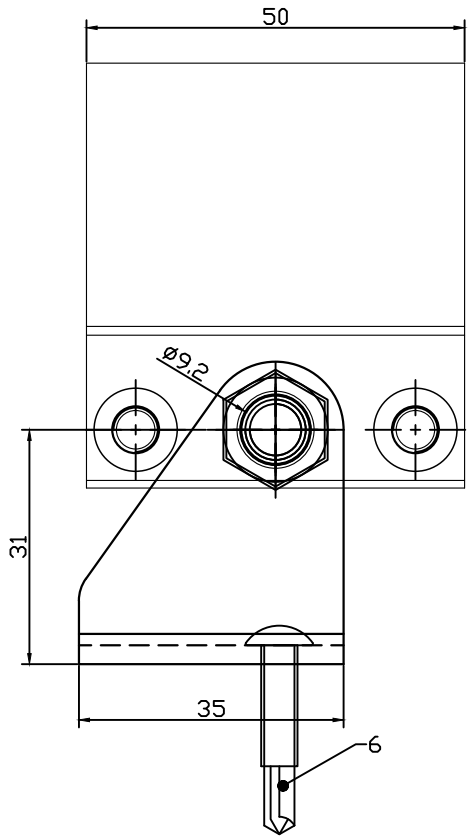

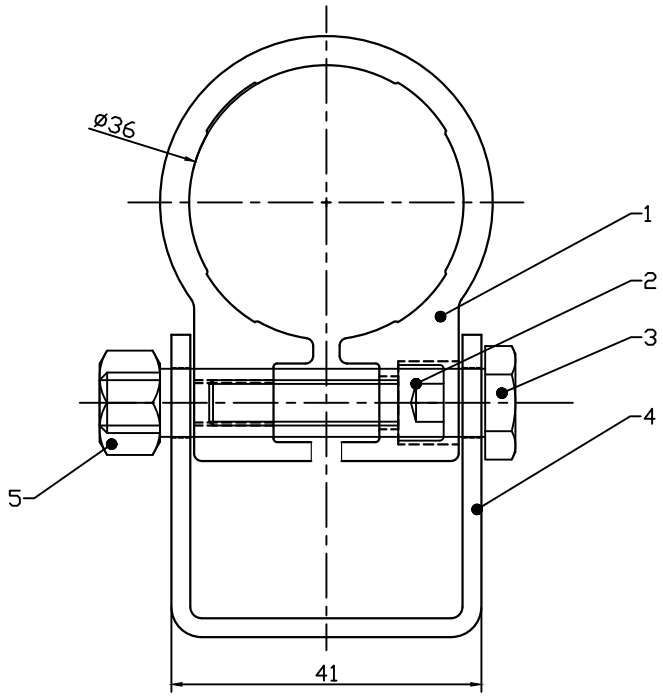

Technical Requirements:

1. The Bracket body defaults to its natural color, and the rounded surface treatment defaults to anodized. Special requirements may apply Please see the specific order details;
2. Screws and other accessories conform to national standards; for special requirements, please refer to the specific order.

Applicable type	L36 Series Electric Screw Window Opener
Applicable window type	Regular types
Installation location	Rear center shaft mounting
Maximum push-pull force	1500N
Packaging	Bulk, sealed in plastic bags, either with the motor or individually packaged.

S/No.	Product number	Part name	Specifications and models	quantity	Remark
6	210-0419	screw	Cross-head self-tapping drill bit ST4.8-16×25mm	4	
5	211-0803	nut	External hexagonal anti-loosening M8	1	
4	270-0401	Bracket	40×36mm\Utype\T4	1	Note①
3	210-0805	screw	External hexagon (half-tooth) Φ9×51-(M8×8) mm	1	
2	210-0606	screw	Hex socket head capM6×25mm	2	
1	8112-0601131	Bracket	Φ36×50mm\hug round\T6	1	Note①

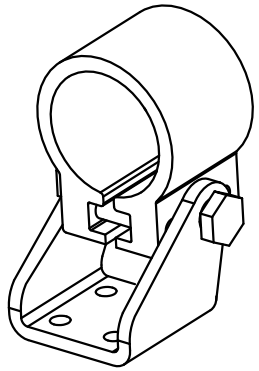

Actual product rendering

Product name	Bracket		Material		surface treatment
Product number	9451-0400001		weight	212.6g	D/No: EH-L36-T0401
Specifications and models	EH-L36-T4		Proportion	1:1	
design			Edition	B1	unit mm P/No. / Projection
Review			-		
Approve					

No tolerance noted	
X ±0.3	X ±2°
.X ±0.15	.X ±1°
.XX ±0.05	.XX ±0.5°
.XXX ±0.02	
Unmarked C-angle C0.3	Unmarked R angle R0.3

* For details not marked with a note, please refer to the 3D image file Path:

EH-L36-T0501

Mark	Number of places	Content before change	Content after changes	Sign	Year, Month, Day

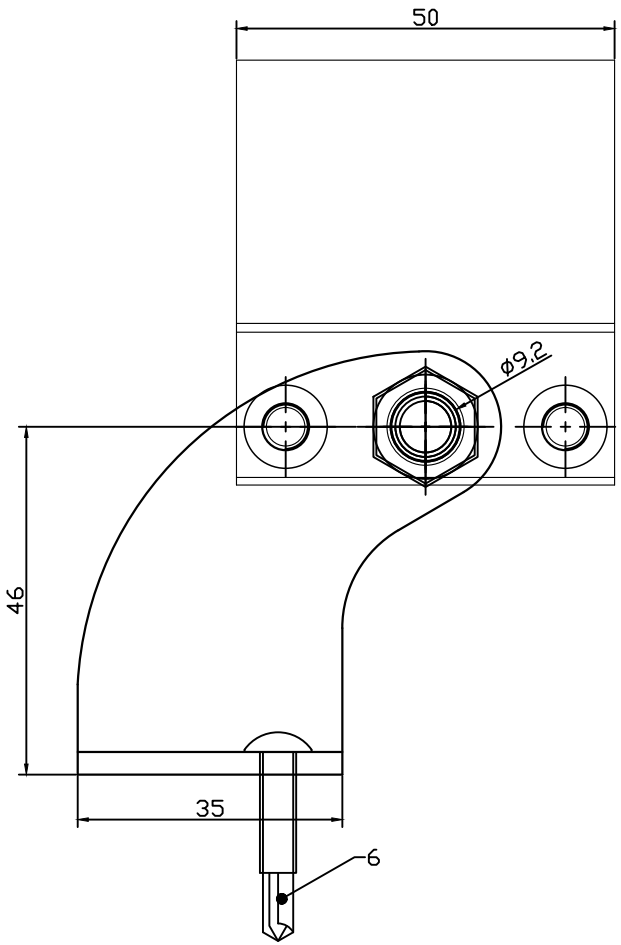

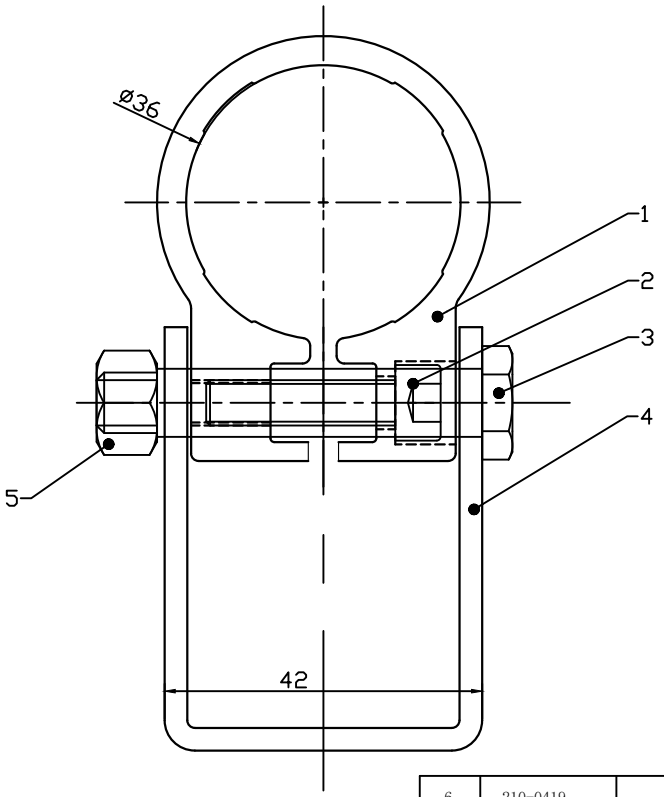

Technical Requirements:

1. The Bracket body defaults to its natural color, and the rounded surface treatment defaults to anodized. Special requirements may apply Please see the specific order details;
2. Screws and other accessories conform to national standards; for special requirements, please refer to the specific order.

Applicable type	L36 Series Electric Screw Window Opener
Applicable window type	Regular types
Installation location	Rear center shaft mounting
Maximum push-pull force	1500N
Packaging	Bulk, sealed in plastic bags, either with the motor or individually packaged.

S/No.	Product number	Part name	Specifications and models	quantity	Remark
6	210-0419	screw	Cross-head self-tapping drill bit ST4.8-16×25mm	4	
5	211-0803	nut	External hexagonal anti-loosening M8	1	
4	270-0501	Bracket	56×36mm\T5\Ushape	1	Note①
3	210-0805	screw	External hexagon (half-tooth) ϕ9×5l- (M8×8) mm	1	
2	210-0606	screw	Hex socket head capM6×25mm	2	
1	8112-0601131	Bracket	ϕ36×50mm\hug round\T6	1	Note①

Product name	Bracket		Material		surface treatment				
Product number	9451-0500001		weight	263.6g	D/No:	EH-L36-T0501			
Specifications and models	EH-L36-T5		Proportion	1:1					
design			Edition	B1	unit	mm	P/No.	/	Projection
Review			-						
Approve									

No tolerance noted	
X ±0.3	X ±2°
.X ±0.15	.X ±1°
.XX ±0.05	.XX ±0.5°
.XXX ±0.02	
Unmarked C-angle C0.3	Unmarked R angle R0.3

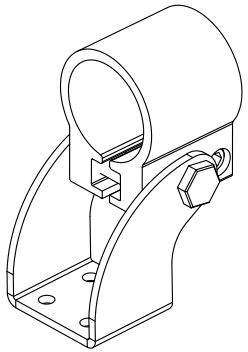

Actual product rendering

* For details not marked with a note, please refer to the 3D image file Path:

EH-L36-T0601

Mark	Number of places	Content before change	Content after changes	Sign	Year, Month, Day

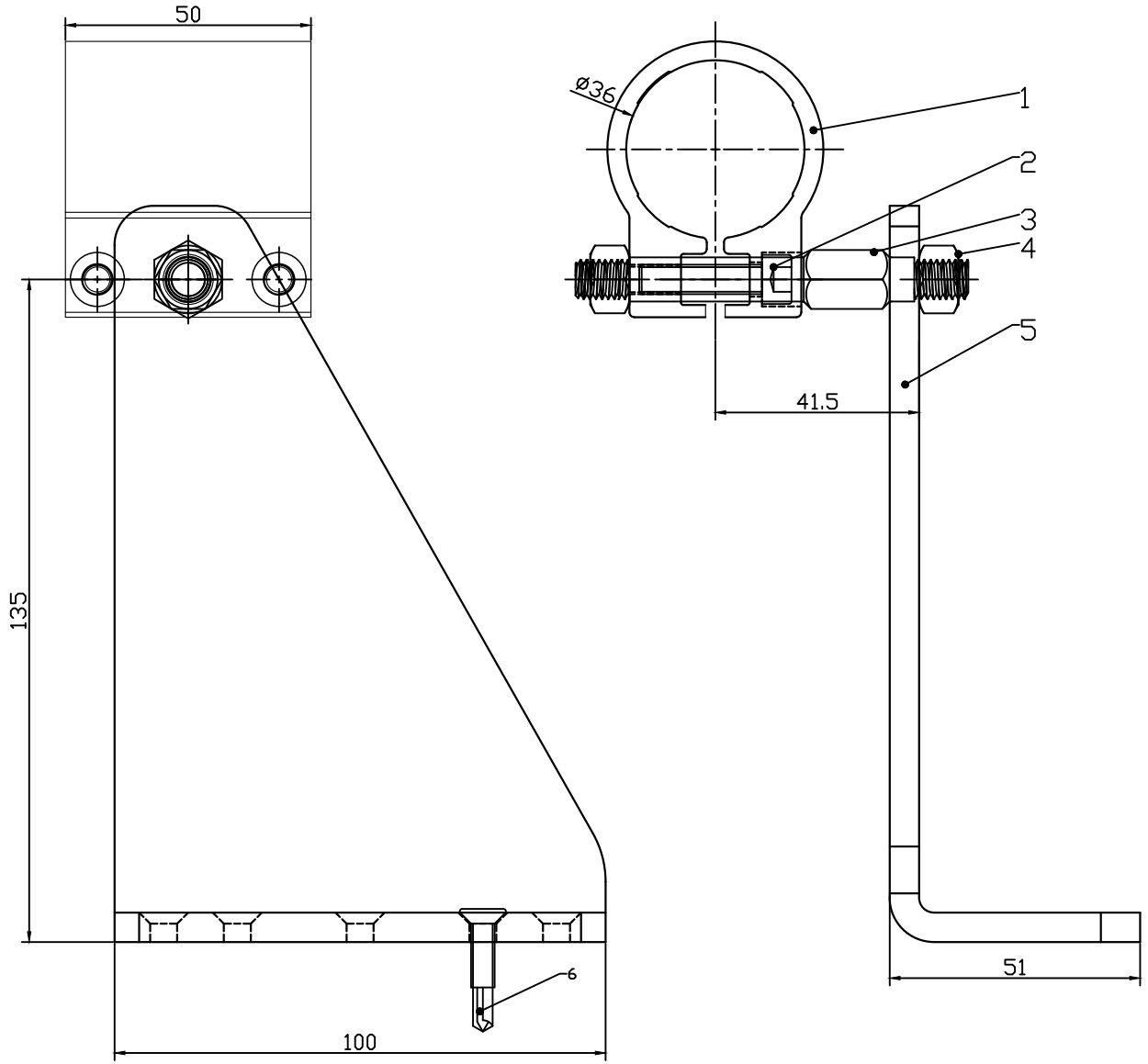

Technical Requirements:

1. Bracket body and hug round surface treatment are anodized by default. See details for specific requirements.Order;
2. Screws and other accessories conform to national standards; for special requirements, please refer to the specific order.
3. ☆ Mark accessories are divided into left and right sides; other accessories are the same.

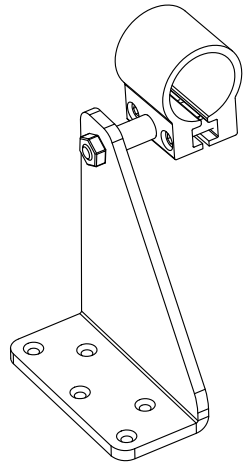

Actual product rendering

Applicable type	L36 Series Electric Screw Window Opener
Applicable window type	Regular types
Installation location	Side mounting at the rear of the fuselage
Maximum push-pull force	1000N
Packaging	Bulk, sealed plastic bags, paired left and right, individually packaged

S/No.	Product number	Part name	Specifications and models	quantity	Remark
6	210-0418	screw	Cross-head countersunk drill bit self-tapping ST4.8-16×25mm	5	
☆ 5	270-0601	Bracket	100×150×50mm\T6\Left\Lshape	1	Note③
4	211-0803	nut	External hexagonal anti-loosening M8	2	
3	239-0001	connecting bolts	M8×80mm\double threadM8×8	1	
2	210-0606	screw	Hex socket head capM6×25mm	2	
1	8112-0601131	Bracket	Φ36×50mm\hug round	1	Note①

Product name	Bracket		Material		surface treatment			
Product number	9451-0600001		weight	406g	D/No:	EH-L36-T0601		
Specifications and models	EH-L36-T6-L		Proportion	1:1				
design			Edition	B1	unit	mm	P/No.	/	Projection
Review								
Approve								

No tolerance noted	
X ±0.3	X ±2°
.X ±0.15	.X ±1°
.XX ±0.05	.XX ±0.5°
.XXX ±0.02	
Unmarked C-angle C0.3	Unmarked R angle R0.3

* For details not marked with a note, please refer to the 3D image file Path:

EH-L36-T0602

Mark	Number of places	Content before change	Content after changes	Sign	Year, Month, Day

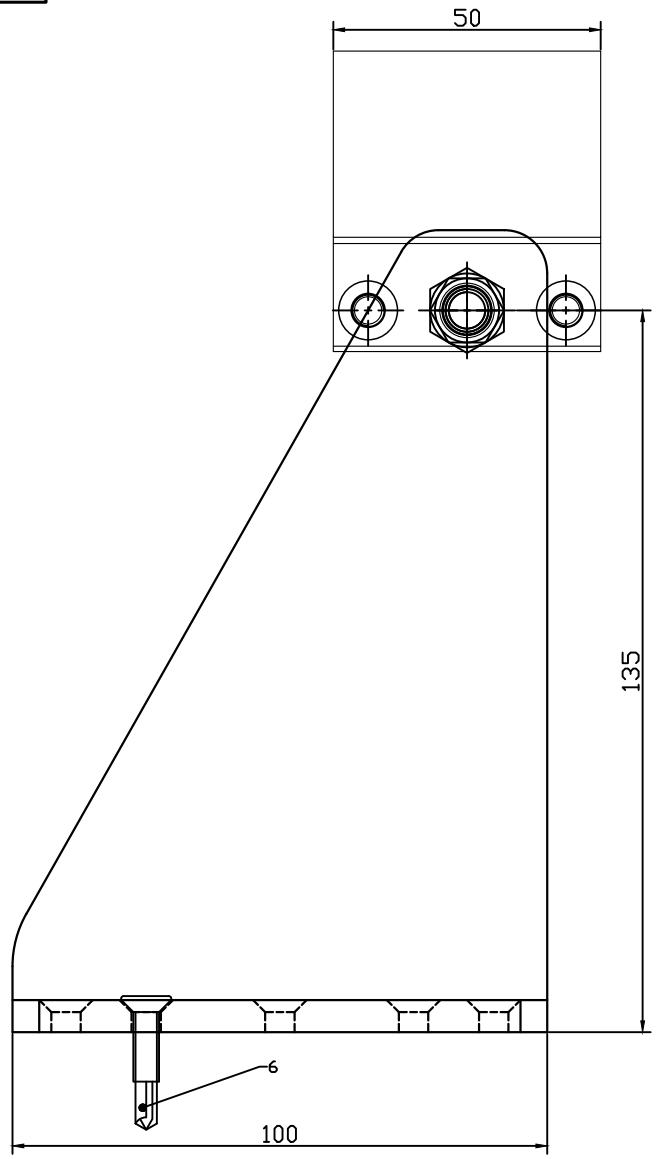

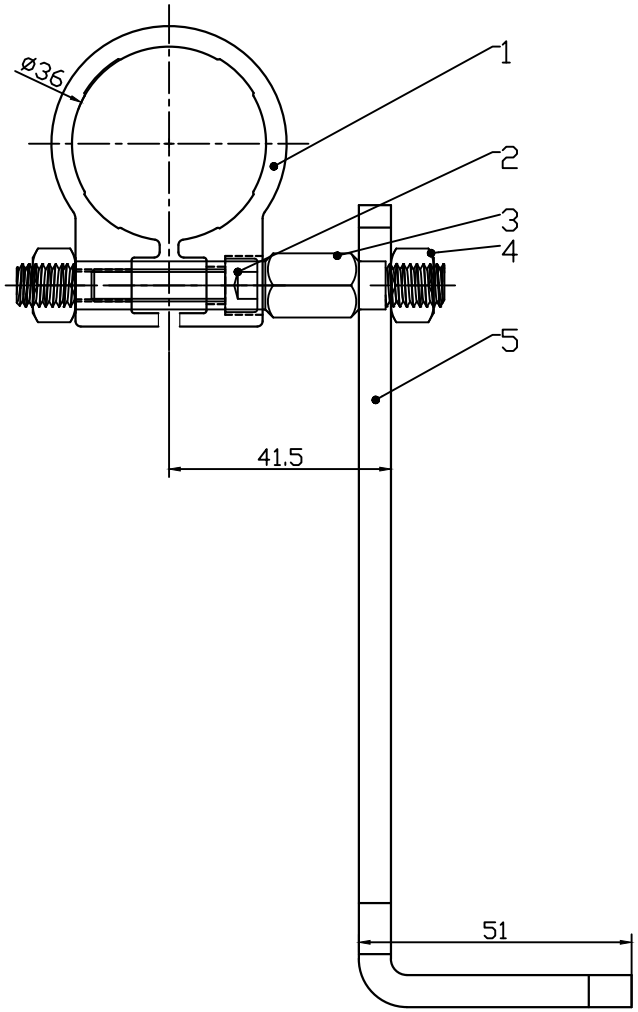

Technical Requirements:

1. Bracket body and hug round surface treatment are anodized by default. See details for specific requirements.Order;
2. Screws and other accessories conform to national standards; for special requirements, please refer to the specific order.
3. ☆ Mark accessories are divided into left and right sides; other accessories are the same.

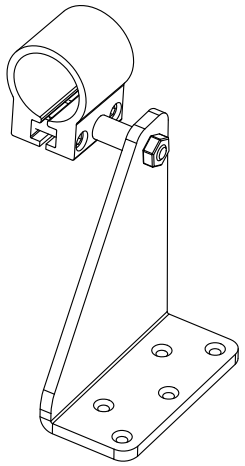

Actual product rendering

Applicable type	L36 Series Electric Screw Window Opener
Applicable window type	Regular types
Installation location	Side mounting at the rear of the fuselage
Maximum push-pull force	1000N
Packaging	Bulk, sealed plastic bags, paired left and right, individually packaged

S/No.	Product number	Part name	Specifications and models	quantity	Remark
6	210-0418	screw	Cross-head countersunk drill bit self-tapping ST4.8-16×25mm	5	
☆5	270-0602	Bracket	100×150×50mm\T6\right\Lshape	1	Note③
4	211-0803	nut	External hexagonal anti-loosening M8	2	
3	239-0001	connecting bolts	M8×80mm\double threadM8×8	1	
2	210-0606	screw	Hex socket head capM6×25mm	2	
1	8112-0601131	Bracket	Φ36×50mm\hug round	1	Note①

Product name	Bracket		Material		surface treatment			
Product number			weight	406g	D/No:	EH-L36-T0602		
Specifications and models	EH-L36-T6-R		Proportion	1:1				
design			Edition	B1	unit	mm	P/No.	/	Projection
Review								
Approve								

No tolerance noted	
X ±0.3	X ±2°
.X ±0.15	.X ±1°
.XX ±0.05	.XX ±0.5°
.XXX ±0.02	
Unmarked C-angle C0.3	Unmarked R angle R0.3

* For details not marked with a note, please refer to the 3D image file Path:

EH-L36-T0603

Mark	Number of places	Content before change	Content after changes	Sign	Year, Month, Day

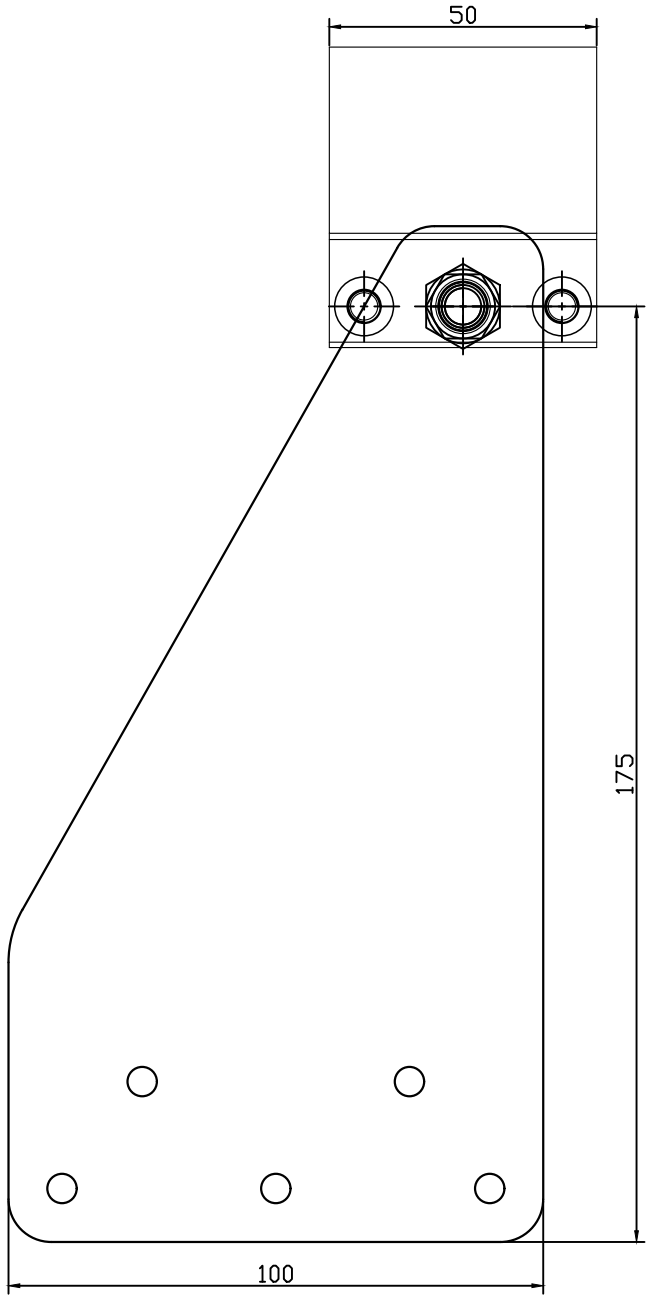

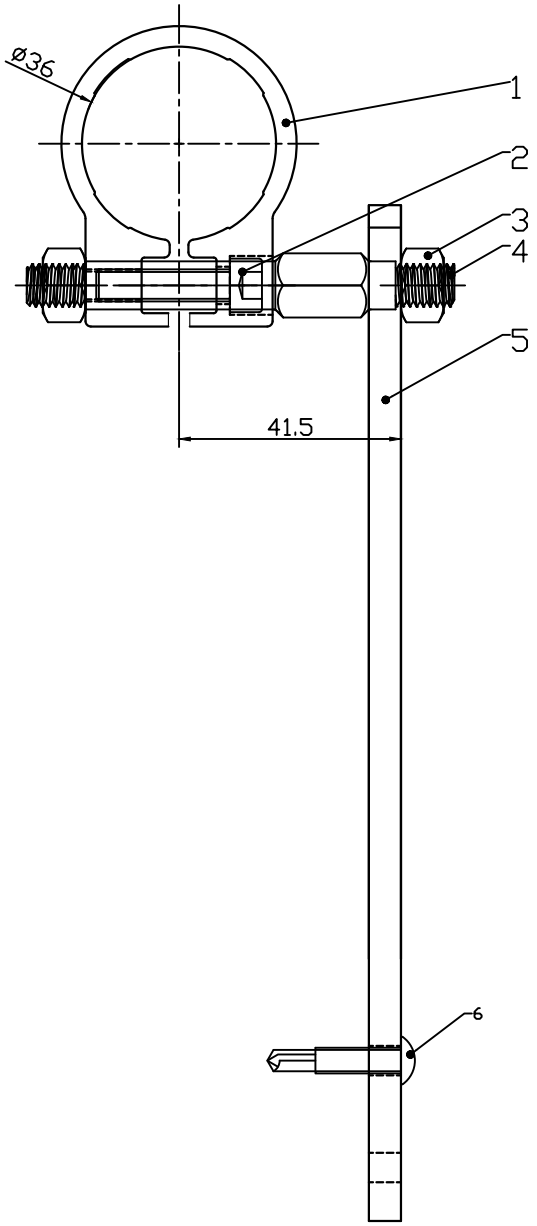

Technical Requirements:

1. Bracket body and hug round surface treatment are anodized by default. See details for specific requirements.Order;
2. Screws and other accessories conform to national standards; for special requirements, please refer to the specific order.

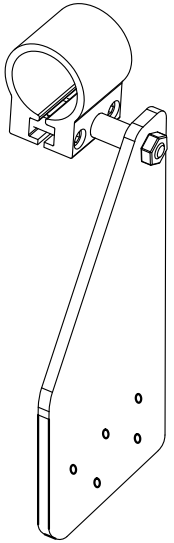

Actual product rendering

Applicable type	L36 Series Electric Screw Window Opener
Applicable window type	Regular types
Installation location	Side mounting at the rear of the fuselage, Initial starting angle>15°
Maximum push-pull force	1000N
Packaging	Bulk, sealed plastic bags, paired left and right, individually packaged

S/No.	Product number	Part name	Specifications and models	quantity	Remark
6	210-0419	screw	Cross-head self-tapping drill bit ST4.8-16×25mm	5	
5	270-0603	Bracket	190×100mm\T6A\Straight board	1	
4	211-0803	nut	External hexagonal anti-loosening M8	2	
3	239-0001	connecting bolts	M8×80mm\double threadM8×8	1	
2	210-0606	screw	Hex socket head capM6×25mm	2	
1	8112-0601131	Bracket	Φ36×50mm\hug round	1	Note①

Product name	Bracket	Material		surface treatment	
Product number	9451-0600003	weight	409g	D/No:	EH-L36-T0603
Specifications and models	EH-L36-T6A	Proportion	1:1		
design		Edition	B1	unit	mm
Review				P/No.	/
Approve				Projection	

No tolerance noted		
X ±0.3	X ±2°	
.X ±0.15	.X ±1°	
.XX ±0.05	.XX ±0.5°	
.XXX ±0.02		
Unmarked C-angle C0.3	Unmarked R angle R0.3	

* For details not marked with a note, please refer to the 3D image file Path:

EH-L35-T0701

Mark	Number of places	Content before change	Content after changes	Sign	Year, Month, Day

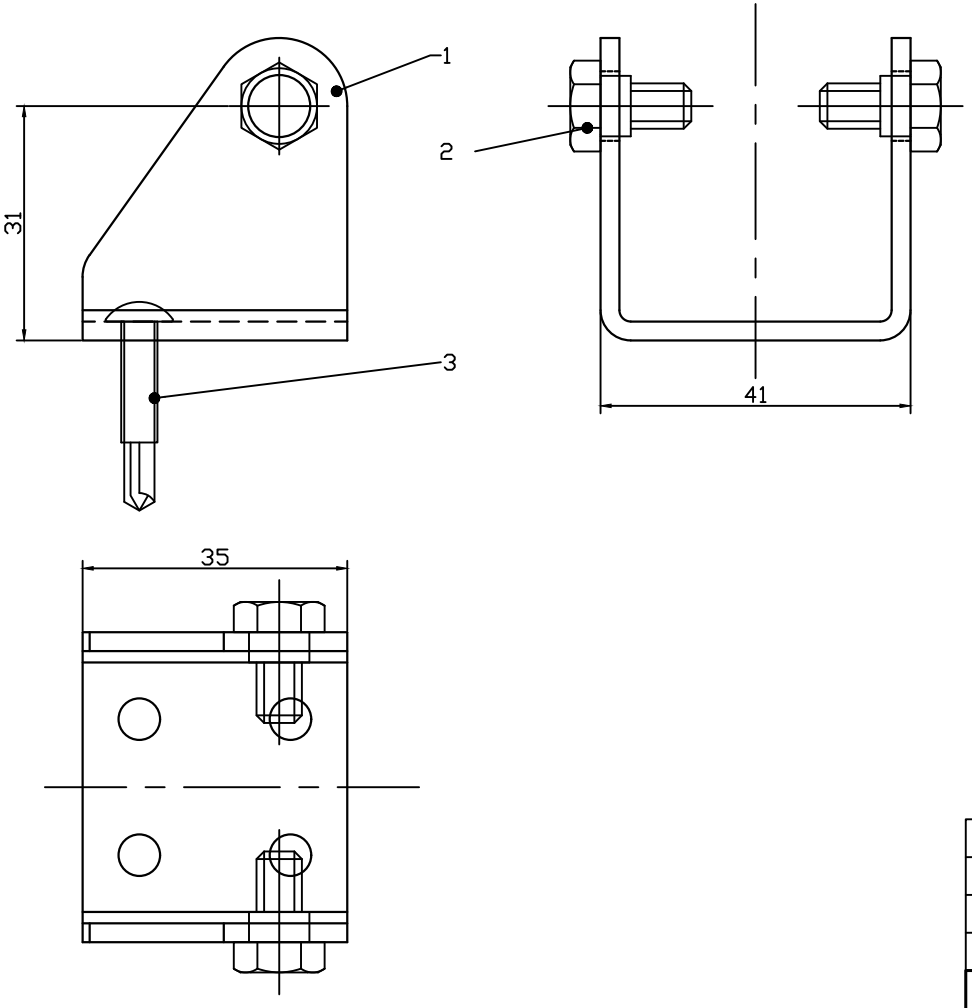

Technical Requirements:

1. The main body of the Bracket is the natural color by default; please see the specific order details for special requirements.
2. Screws and other accessories conform to national standards; for special requirements, please refer to the specific order.

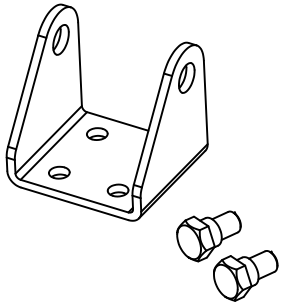

Actual product rendering

Applicable type	Electric louvered window opener B35 series H35 Series Electric Sliding Window Opener
Applicable window type	Regular types
Installation location	Side-mounted central shaft of fuselage
Maximum push-pull force	150ON
Packaging	Bulk, sealed plastic bags, paired left and right, individually packaged

S/No.	Product number	Part name	Specifications and models	quantity	Remark
3	210-0419	screw	Cross-head self-tapping drill bit ST4.8-16×25mm	4	
2	210-0604	screw	external hexagonal steps φ8X12-M6X8mm	2	
1	270-0701	Bracket	40×36mm\T7\Ushape\Aperture φ8.2	1	Note①

Product name	Bracket		Material		surface treatment				
Product number	9451-0700001		weight	79.3g	D/No:	EH-L35-T0701			
Specifications and models	EH-L35F-T7		Proportion	1:1					
design			Edition	B1	unit	mm	P/No.	/	Projection
Review			-						
Approve									

No tolerance noted	
X ±0.3	X ±2°
.X ±0.15	.X ±1°
.XX ±0.05	.XX ±0.5°
.XXX ±0.02	
Unmarked C-angle C0.3	Unmarked R angle R0.3

* For details not marked with a note, please refer to the 3D image file Path:

EH-L45-T0901

Mark	Number of places	Content before change	Content after changes	Sign	Year, Month, Day

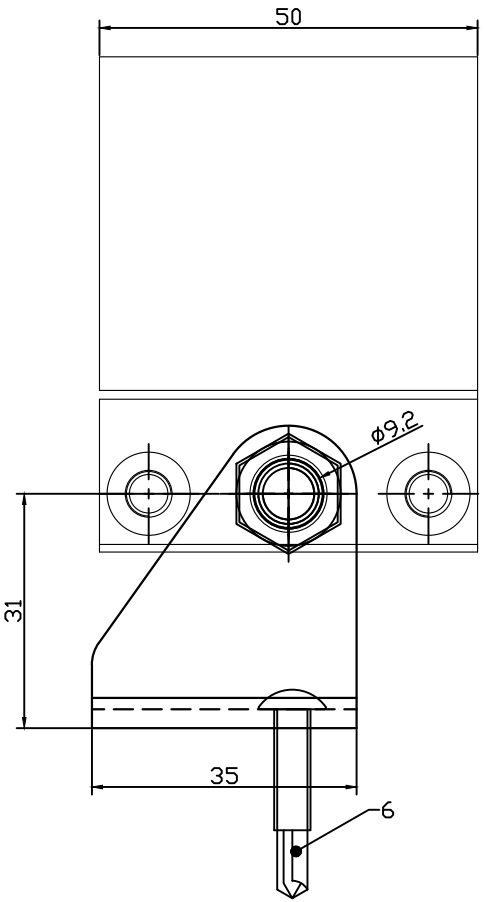

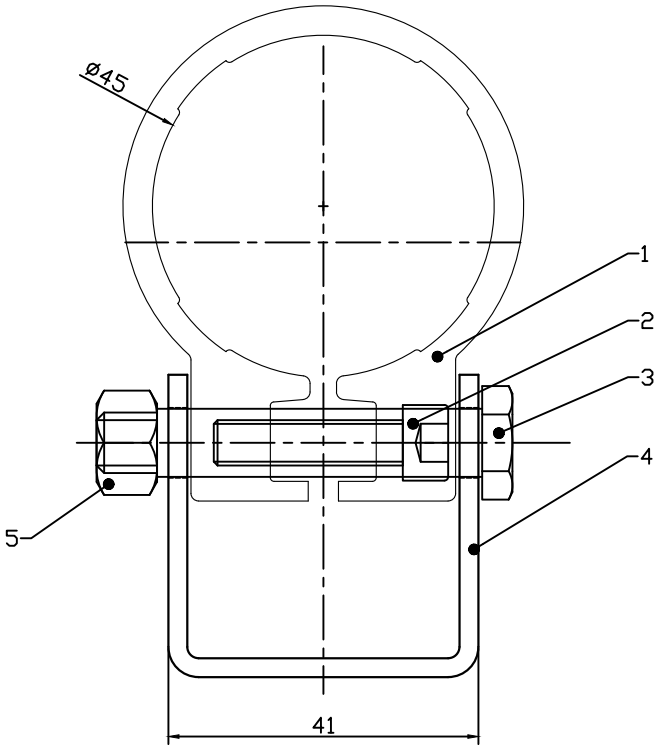

Technical Requirements:

1. The Bracket body defaults to its natural color, and the rounded surface treatment defaults to anodized. Special requirements may apply Please see the specific order details;
2. Screws and other accessories conform to national standards; for special requirements, please refer to the specific order.

Applicable type	L45 Series Electric Screw Window Opener
Applicable window type	Regular types
Installation location	Rear center shaft mounting
Maximum push-pull force	3000N
Packaging	Bulk, sealed in plastic bags, either with the motor or individually packaged.

S/No.	Product number	Part name	Specifications and models	quantity	Remark
6	210-0419	screw	Cross-head self-tapping drill bit ST4.8-16×25mm	4	
5	211-0803	nut	External hexagonal anti-loosening M8	1	
4	270-0401	Bracket	40×36mm\Utype\T4	1	Note①
3	210-0805	screw	External hexagon (half-tooth) φ9×51-（M8×8）mm	1	
2	210-0606	screw	Hex socket head capM6×25mm	2	
1	8112-0901131	Bracket	φ45×50mm\hug round\T9	1	Note①

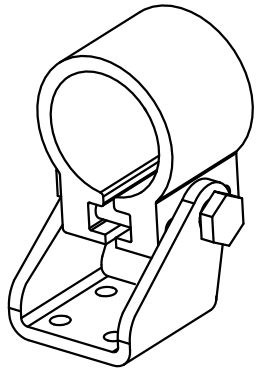

Actual product rendering

Product name	Bracket		Material		surface treatment
Product number	9451-0900001		weight	XXXg	D/No: EH-L45-T0901
Specifications and models	EH-L45-T9		Proportion	1:1	
design			Edition	B1	unit mm P/No. / Projection
Review					
Approve					

No tolerance noted	
X ±0.3	X ±2°
.X ±0.15	.X ±1°
.XX ±0.05	.XX ±0.5°
.XXX ±0.02	
Unmarked C-angle C0.3	Unmarked R angle R0.3

* For details not marked with a note, please refer to the 3D image file Path:

EH-L45-T1001

Mark	Number of places	Content before change	Content after changes	Sign	Year, Month, Day

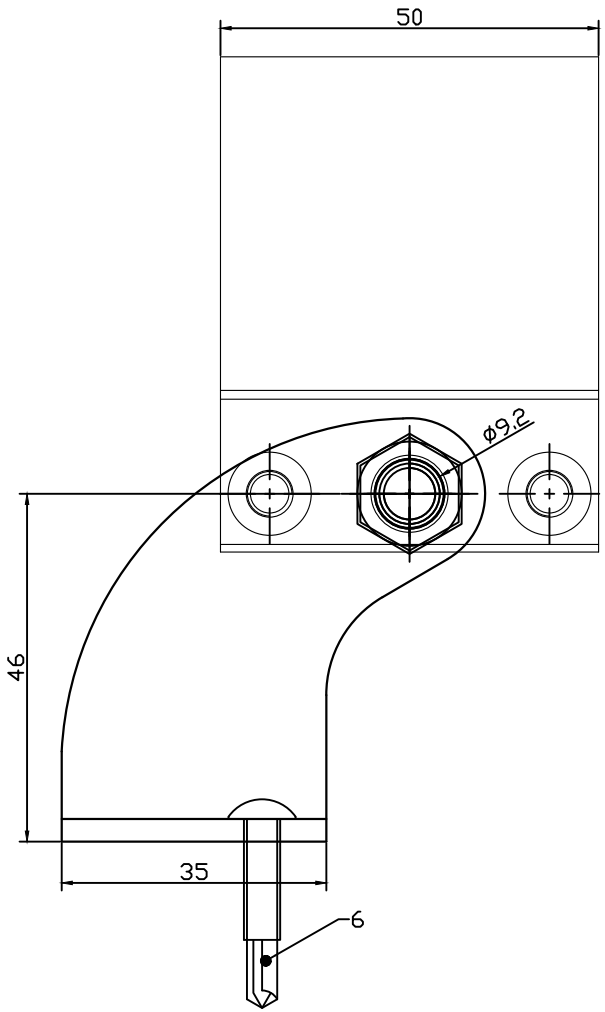

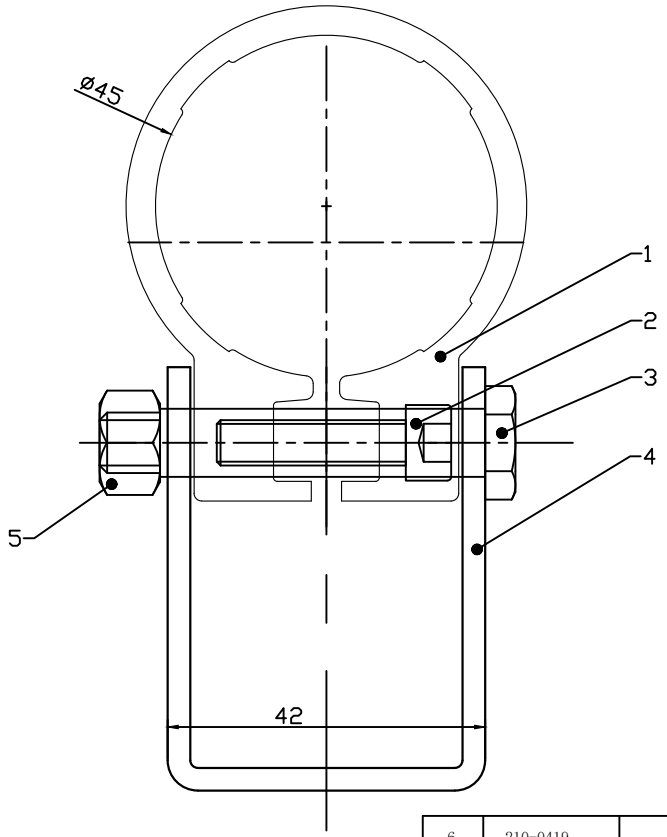

Technical Requirements:

1. The Bracket body defaults to its natural color, and the rounded surface treatment defaults to anodized. Special requirements may apply Please see the specific order details;
2. Screws and other accessories conform to national standards; for special requirements, please refer to the specific order.

Applicable type	L45 Series Electric Screw Window Opener
Applicable window type	Regular types
Installation location	Rear center shaft mounting
Maximum push-pull force	3000N
Packaging	Bulk, sealed in plastic bags, either with the motor or individually packaged.

S/No.	Product number	Part name	Specifications and models	quantity	Remark
6	210-0419	screw	Cross-head self-tapping drill bit ST4.8-16×25mm	4	
5	211-0803	nut	External hexagonal anti-loosening M8	1	
4	270-0501	Bracket	56×36mm\T5\Ushape	1	Note①
3	210-0805	screw	External hexagon (half-tooth) ϕ9×51-（M8×8）mm	1	
2	210-0606	screw	Hex socket head capM6×25mm	2	
1	8112-0901131	Bracket	ϕ45×50mm\hug round\T9	1	Note①

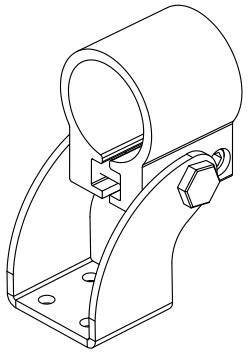

Actual product rendering

Product name	Bracket		Material		surface treatment
Product number	9451-0500001		weight	XXXg	D/No: EH-L45-T1001
Specifications and models	EH-L36-T5		Proportion	1:1	
design			Edition	B1	unit mm P/No. / Projection
Review					
Approve					

No tolerance noted	
X ±0.3	X ±2°
.X ±0.15	.X ±1°
.XX ±0.05	.XX ±0.5°
.XXX ±0.02	
Unmarked C-angle C0.3	Unmarked R angle R0.3

* For details not marked with a note, please refer to the 3D image file Path:

EH-L45-T1101

Mark	Number of places	Content before change	Content after changes	Sign	Year, Month, Day

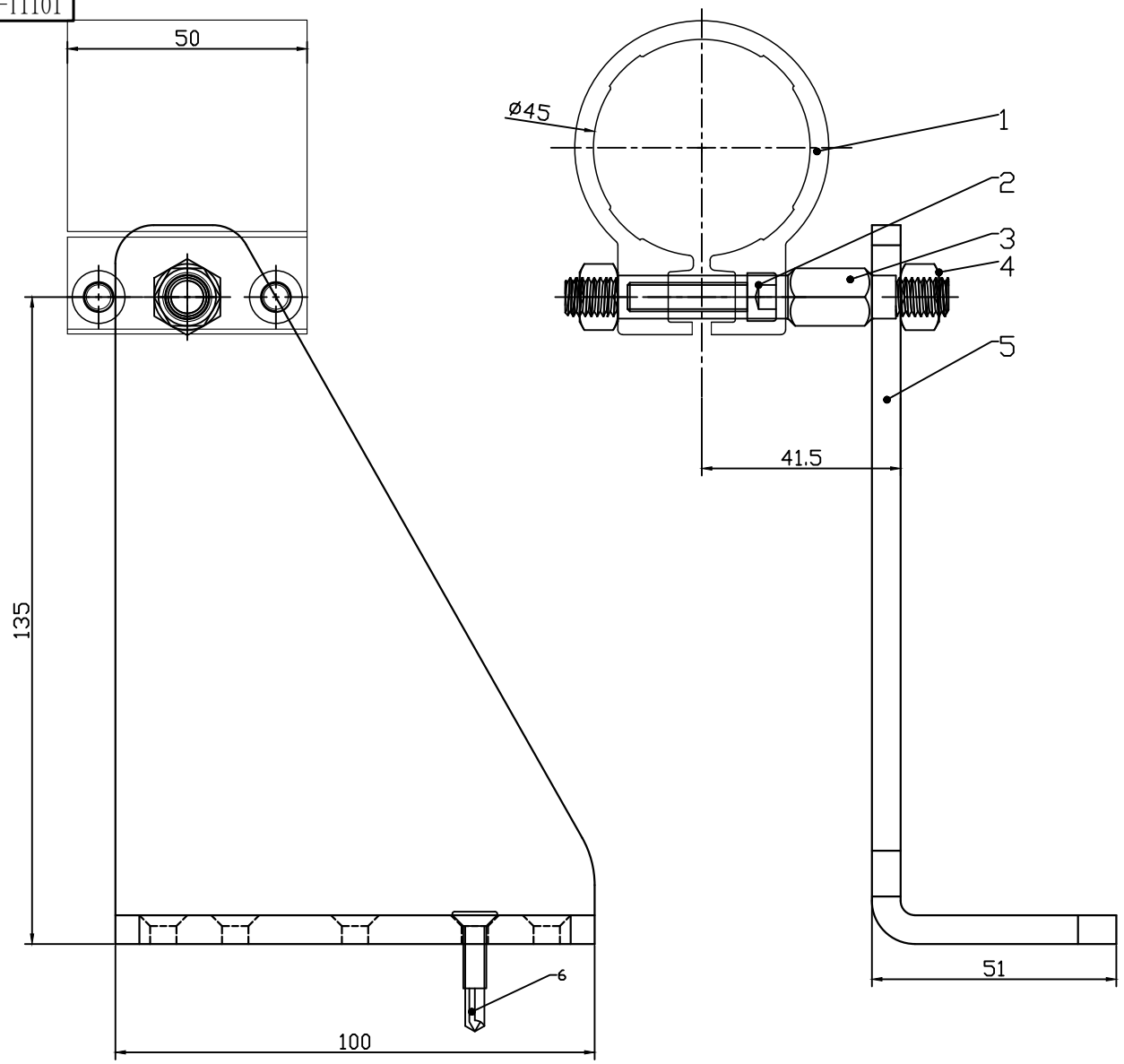

Technical Requirements:

1. Bracket body and hug round surface treatment are anodized by default. See details for specific requirements.Order;
2. Screws and other accessories conform to national standards; for special requirements, please refer to the specific order.
3. ☆ Mark accessories are divided into left and right sides; other accessories are the same.

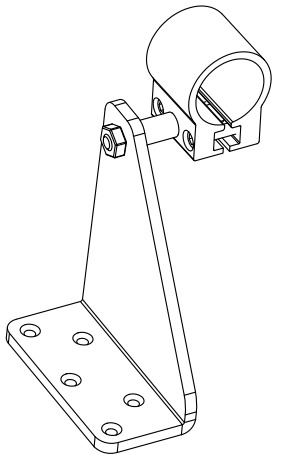

Actual product rendering

Applicable type	L45 Series Electric Screw Window Opener
Applicable window type	Regular types
Installation location	Side mounting at the rear of the fuselage
Maximum push-pull force	1000N
Packaging	Bulk, sealed in plastic bags, either with the motor or individually packaged.

S/No.	Product number	Part name	Specifications and models	quantity	Remark
6	210-0418	screw	Cross-head countersunk drill bit self-tapping ST4.8-16×25mm	5	
☆ 5	270-0601	Bracket	100×150×50mm\T6\Left\L shape	1	Note⑥
4	211-0803	nut	External hexagonal anti-loosening M8	2	
3	239-0001	connecting bolts	M8×80mm\double threadM8×8	1	
2	210-0606	screw	Hex socket head capM6×25mm	2	
1	8112-0901131	Bracket	Φ45×50mm\hug round	1	Note①

Product name	Bracket	Material		surface treatment				
Product number	9451-1100001	weight	4XXg	D/No:	EH-L45-T1101			
Specifications and models	EH-L45-T11-L	Proportion	1:1					
design		Edition	B1	unit	mm	P/No.	/	Projection
Review								
Approve								

No tolerance noted	
X ±0.3	X ±2°
.X ±0.15	.X ±1°
.XX ±0.05	.XX ±0.5°
.XXX ±0.02	
Unmarked C-angle C0.3	Unmarked R angle R0.3

* For details not marked with a note, please refer to the 3D image file Path:

EH-L45-T1102

Mark	Number of places	Content before change	Content after changes	Sign	Year, Month, Day

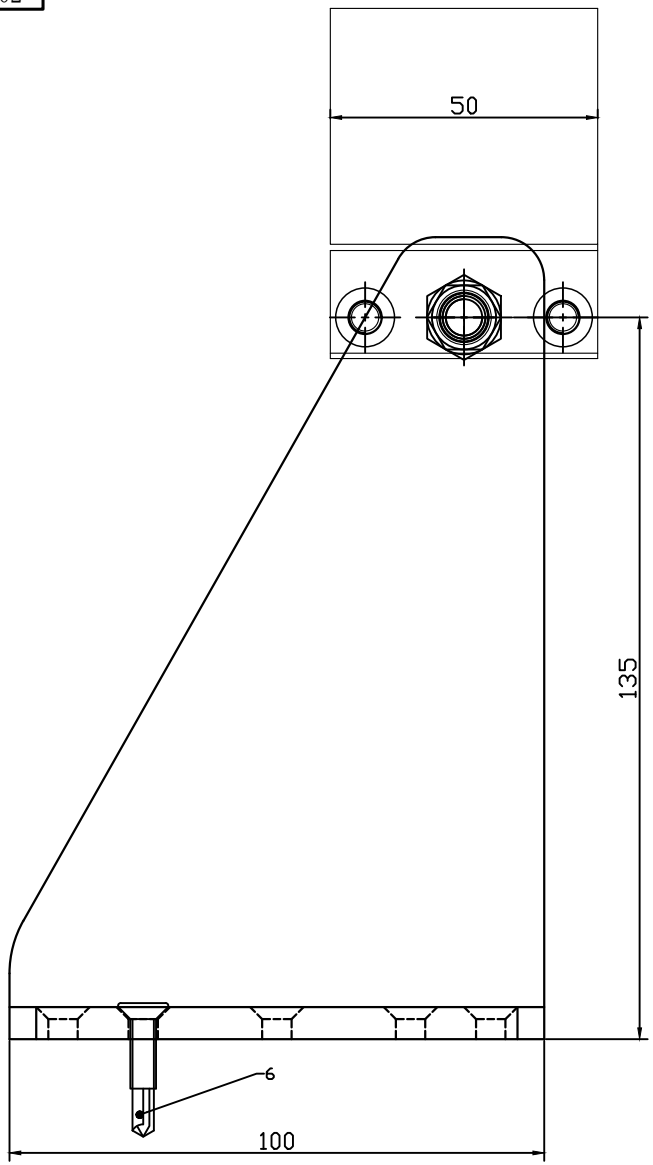

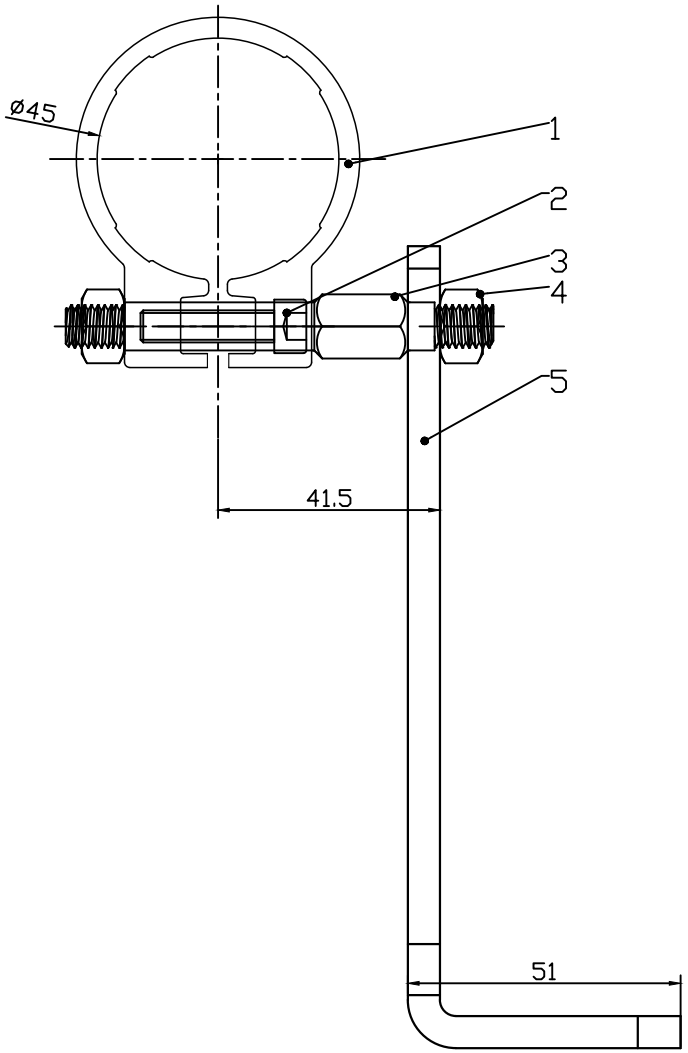

Technical Requirements:

1. Bracket body and hug round surface treatment are anodized by default. See details for specific requirements.Order;
2. Screws and other accessories conform to national standards; for special requirements, please refer to the specific order.
3. ☆ Mark accessories are divided into left and right sides; other accessories are the same.

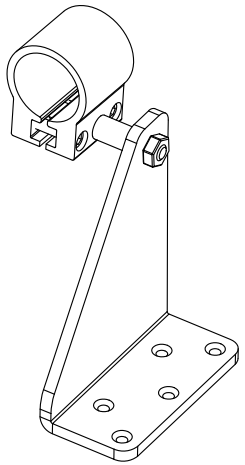

Actual product rendering

Applicable type	L45 Series Electric Screw Window Opener
Applicable window type	Regular types
Installation location	Side mounting at the rear of the fuselage
Maximum push-pull force	1000N
Packaging	Bulk, sealed in plastic bags, either with the motor or individually packaged.

S/No.	Product number	Part name	Specifications and models	quantity	Remark
6	210-0418	screw	Cross-head countersunk drill bit self-tapping ST4.8-16×25mm	5	
☆5	270-0602	Bracket	100×150×50mm\T6\right\Lshape	1	Note⑥
4	211-0803	nut	External hexagonal anti-loosening M8	2	
3	239-0001	connecting bolts	M8×80mm\double threadM8×8	1	
2	210-0606	screw	Hex socket head capM6×25mm	2	
1	8112-0901131	Bracket	Φ45×50mm\hug round	1	Note①

Product name	Bracket	Material		surface treatment				
Product number	9451-1100002	weight	4XXg	D/No:	EH-L45-T1102			
Specifications and models	EH-L45-T11-R	Proportion	1:1					
design		Edition	B1	unit	mm	P/No.	/	Projection
Review								
Approve								

No tolerance noted	
X ±0.3	X ±2°
.X ±0.15	.X ±1°
.XX ±0.05	.XX ±0.5°
.XXX ±0.02	
Unmarked C-angle C0.3	Unmarked R angle R0.3

* For details not marked with a note, please refer to the 3D image file Path:

EH-L45-T1103

Mark	Number of places	Content before change	Content after changes	Sign	Year, Month, Day

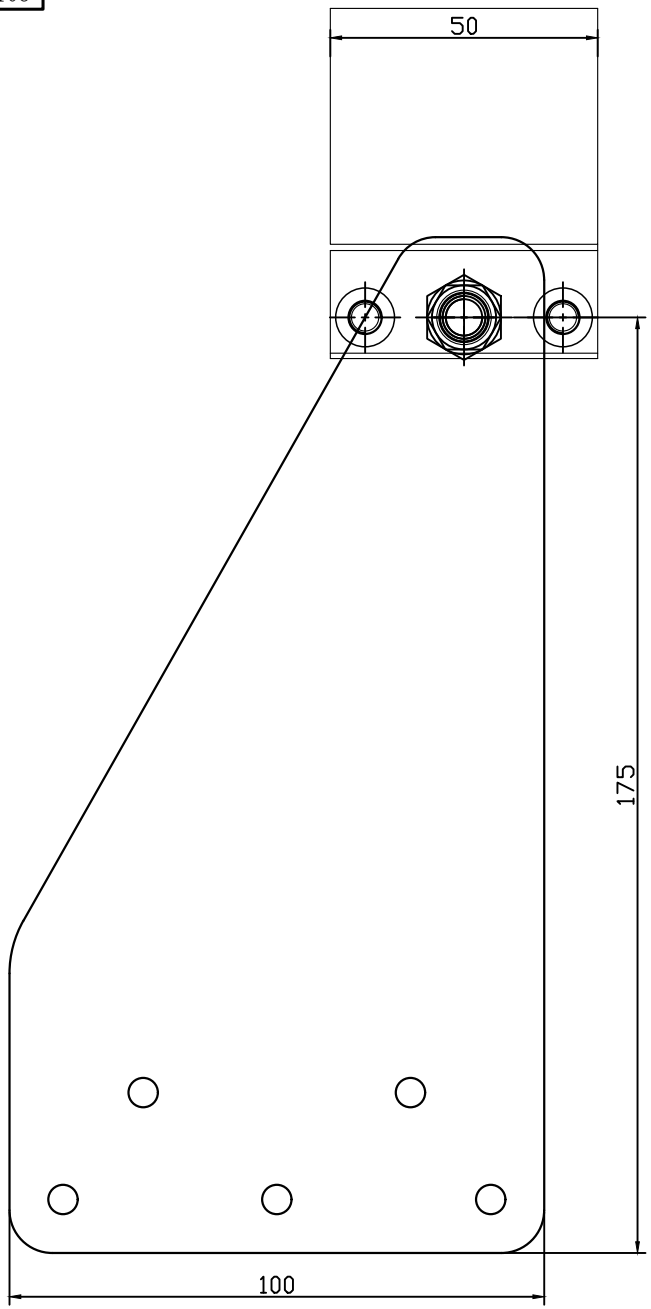

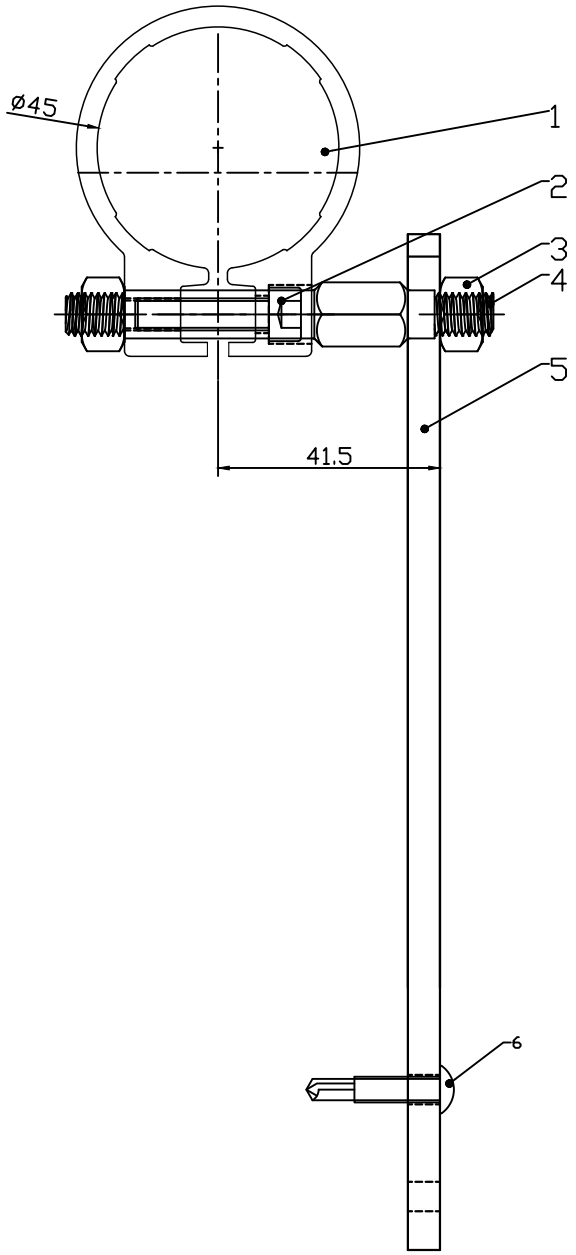

Technical Requirements:

1. The Bracket body defaults to its natural color, and the rounded surface treatment defaults to anodized. Special requirements may apply Please see the specific order details;
2. Screws and other accessories conform to national standards; for special requirements, please refer to the specific order.

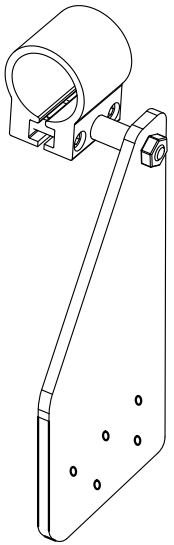

Actual product rendering

Applicable type	L45 Series Electric Screw Window Opener
Applicable window type	Regular types
Installation location	Side mounting at the rear of the fuselage
Maximum push-pull force	1000N
Packaging	Bulk, sealed in plastic bags, either with the motor or individually packaged.

S/No.	Product number	Part name	Specifications and models	quantity	Remark
6	210-0419	screw	Cross-head self-tapping drill bit ST4.8-16×25mm	5	
5	270-0603	Bracket	190×100mm\T6A\Straight board	1	
4	211-0803	nut	External hexagonal anti-loosening M8	2	
3	239-0001	connecting bolts	M8×80mm\double threadM8×8	1	
2	210-0606	screw	Hex socket head capM6×25mm	2	
1	8112-0901131	Bracket	Φ45×50mm\hug round	1	Note①

Product name	Bracket	Material		surface treatment	
Product number	9451-1100003	weight	4XXg	D/No:	EH-L45-T1103
Specifications and models	EH-L45-T11A	Proportion	1:1		
design		Edition	B1	unit	mm
Review				P/No.	/
Approve				Projection	

No tolerance noted		
X	±0.3	X ±2°
.X	±0.15	.X ±1°
.XX	±0.05	.XX ±0.5°
.XXX	±0.02	
Unmarked C-angle C0.3		Unmarked R angle R0.3

* For details not marked with a note, please refer to the 3D image file Path:

EH-C35-T1201

Mark	Number of places	Content before change	Content after changes	Sign	Year, Month, Day

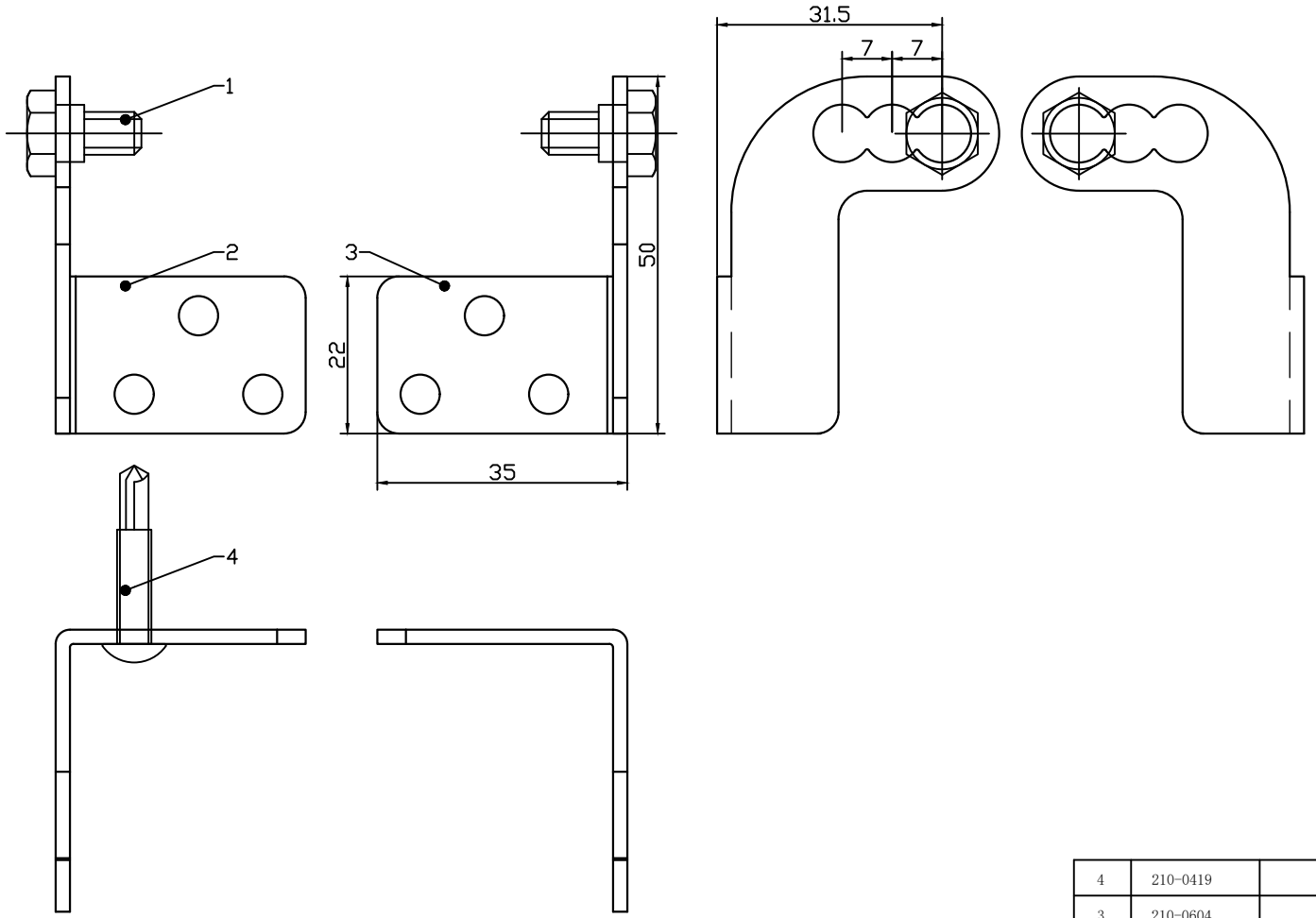

Technical Requirements:

1. The Bracket body defaults to its natural color, and the rounded surface treatment defaults to anodized. Special requirements may apply Please see the specific order details;
2. Screws and other accessories conform to national standards; for special requirements, please refer to the specific order.

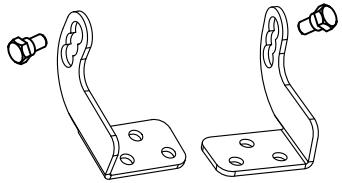

Actual product rendering

Applicable type	Electric chain window opener C35 series
Applicable window type	Regular types
Installation location	Install the end caps on both sides of the fuselage
Maximum push-pull force	1000N
Packaging	Bulk, sealed in plastic bags, either with the motor or individually packaged.

S/No.	Product number	Part name	Specifications and models	quantity	Remark
4	210-0419	screw	Cross-head self-tapping drill bit ST4.8-16×25mm	6	
3	210-0604	screw	external hexagonal steps Φ8×12-M6×8mm	2	
2	270-1202	Bracket	50×39.5×35mm\T12\right	1	
1	270-1201	Bracket	50×39.5×35mm\T12\Left	1	Note①

Product name	Bracket		Material		surface treatment			
Product number	9451-1200001		weight	73.6g	D/No:	EH-C35-T1201		
Specifications and models	EH-C35-T12		Proportion	1:1				
design			Edition	B1	unit	mm	P/No.	1 / 4	Projection
Review			-					
Approve								

No tolerance noted	
X ±0.3	X ±2°
.X ±0.15	.X ±1°
.XX ±0.05	.XX ±0.5°
.XXX ±0.02	
Unmarked C-angle C0.3	Unmarked R angle R0.3

* For details not marked with a note, please refer to the 3D image file Path:

EH-C35-T1301

Mark	Number of places	Content before change	Content after changes	Sign	Year, Month, Day

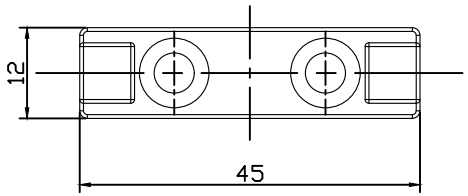

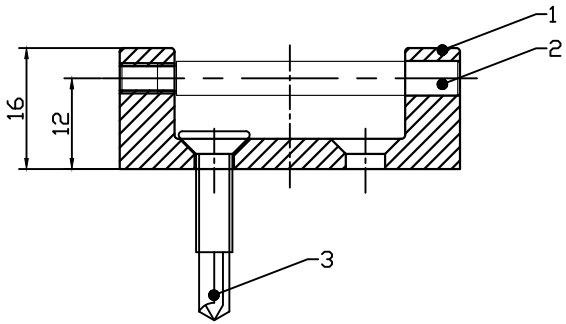

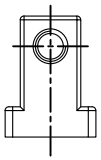

Technical Requirements:

1. The Bracket body is painted silver by default; please see the specific order details for special requirements.
2. Screws and other accessories conform to national standards; for special requirements, please refer to the specific order.

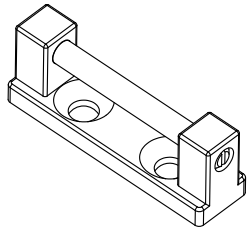

Actual product rendering

Applicable type	Electric chain window opener C35 series
Applicable window type	Regular types
Installation location	Chain head window sash edge installation
Maximum push-pull force	1000N
Packaging	Bulk, sealed in plastic bags, either with the motor or individually packaged.

S/No.	Product number	Part name	Specifications and models	quantity	Remark
3	210-0418	screw	Cross-head countersunk drill bit self-tapping ST4.8-16×25mm	2	
2	227-0005	screw	φ4.5×45 (M4×5)\One character with teeth	1	
1	8244-1301121	Bracket	45×18×15mm	1	Note①

Product name	Bracket		Material		surface treatment			
Product number	9451-1300001		weight	XXg	D/No:	EH-C35-T1301		
Specifications and models	EH-C35-T13		Proportion	1:1				
design			Edition	B1	unit	mm	P/No.	1 / 3	Projection
Review			-					
Approve								

No tolerance noted	
X ±0.3	X ±2°
.X ±0.15	.X ±1°
.XX ±0.05	.XX ±0.5°
.XXX ±0.02	
Unmarked C-angle C0.3	Unmarked R angle R0.3

* For details not marked with a note, please refer to the 3D image file Path:

EH-C35-T1401

Mark	Number of places	Content before change	Content after changes	Sign	Year, Month, Day

Technical Requirements:

1. The Bracket body is painted silver by default; please see the specific order details for special requirements.
2. Screws and other accessories conform to national standards; for special requirements, please refer to the specific order.

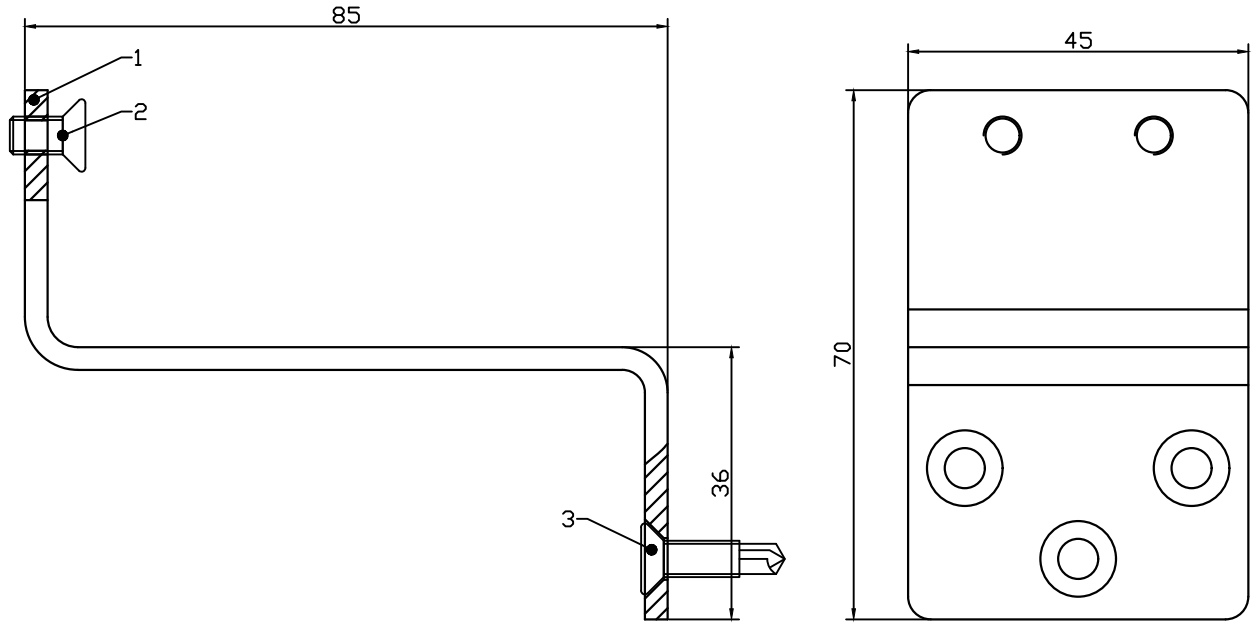

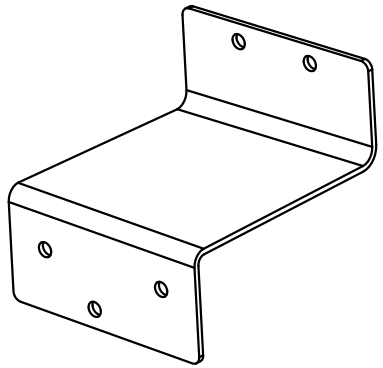

Actual product rendering

Applicable type	Electric chain window opener C35 series
Applicable window type	tilt-and-turn window
Installation location	Chain head window sash edge installation
Maximum push-pull force	500N
Packaging	Bulk, sealed plastic bags, individually packaged

S/No.	Product number	Part name	Specifications and models	quantity	Remark
3	210-0417	screw	Cross-shaped countersunk drill shank self-tappingST4.8-16×19mm	3	
2	210-0502	screw	cross headM5×10mm	2	
1	8270-1401123	Bracket	85×70×45mm\T14\Ztype\Fall inwards	1	Note①

Product name	Bracket	Material		surface treatment	
Product number	9451-1400001	weight	XXg	D/No:	EH-C35-T1401
Specifications and models	EH-C35-T14	Proportion	1:1		
design		Edition	B1	unit: mm	P/No. 1 / 2
Review				Projection	
Approve					

No tolerance noted	
X ±0.3	X ±2°
.X ±0.15	.X ±1°
.XX ±0.05	.XX ±0.5°
.XXX ±0.02	
Unmarked C-angle C0.3	Unmarked R angle R0.3

* For details not marked with a note, please refer to the 3D image file Path:

EH-C40-T1501

Mark	Number of places	Content before change	Content after changes	Sign	Year, Month, Day

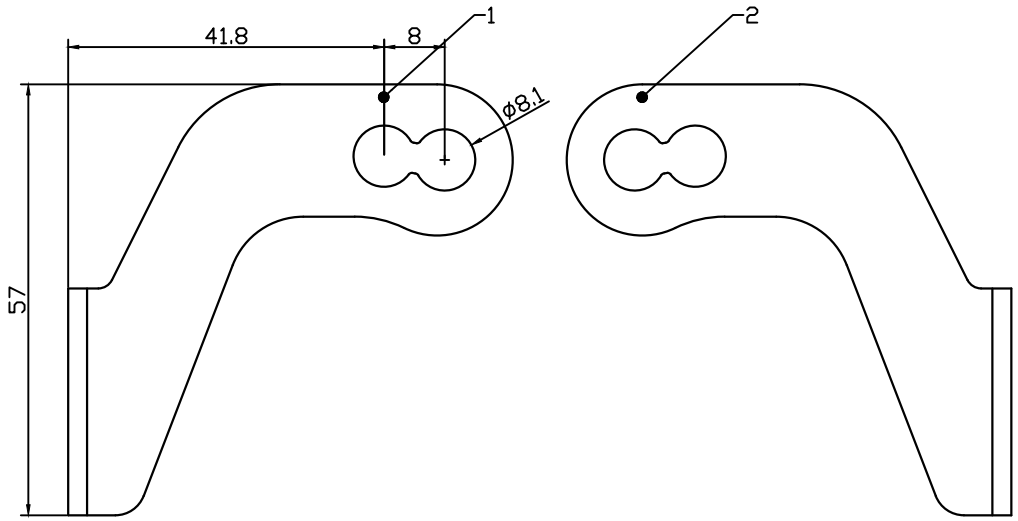

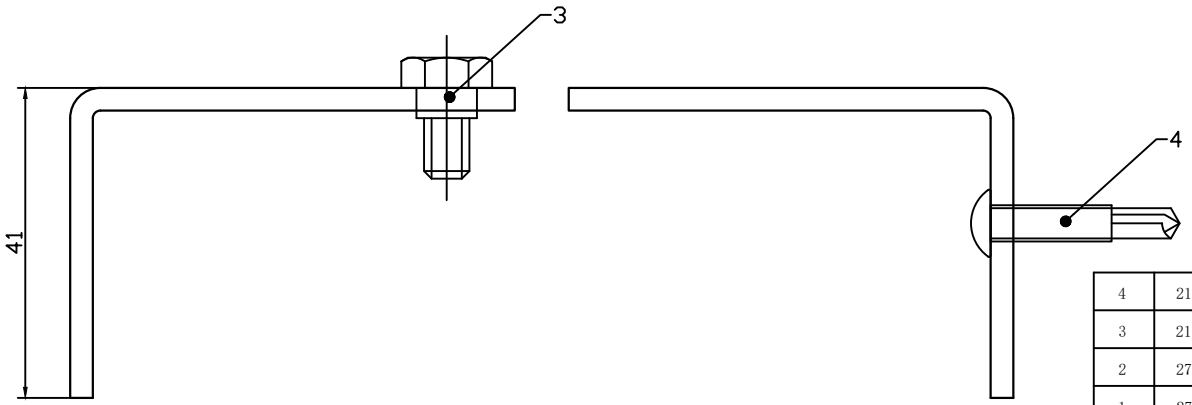

Technical Requirements:

1. The Bracket body is painted silver by default; please see the specific order details for special requirements.
2. Screws and other accessories conform to national standards; for special requirements, please refer to the specific order.

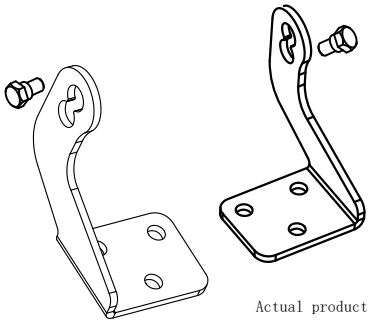

Actual product rendering

Applicable type	C40 series electric chain window opener
Applicable window type	Regular types
Installation location	Install the end caps on both sides of the fuselage
Maximum push-pull force	1000N
Packaging	Bulk, sealed in plastic bags, either with the motor or individually packaged.

S/No.	Product number	Part name	Specifications and models	quantity	Remark
4	210-0419	screw	Cross-head self-tapping drill bit ST4.8-16×25mm	6	
3	210-0604	screw	external hexagonal steps φ8×12-M6×8mm	2	
2	270-1502	Bracket	59×57×41mm\T15\right	1	
1	270-1501	Bracket	59×57×41mm\T15\Left	1	Note①

Product name	Bracket	Material		surface treatment	
Product number	9451-1500001	weight	xxg	D/No:	EH-C40-T1501
Specifications and models	EH-C40-T15	Proportion	1:1		
design		Edition	B1	unit: mm P/No. 1 / 4	Projection
Review					
Approve					

No tolerance noted	
X ±0.3	X ±2°
.X ±0.15	.X ±1°
.XX ±0.05	.XX ±0.5°
.XXX ±0.02	
Unmarked C-angle C0.3	Unmarked R angle R0.3

* For details not marked with a note, please refer to the 3D image file Path:

EH-C40-T1601

Mark	Number of places	Content before change	Content after changes	Sign	Year, Month, Day

Technical Requirements:

1. The Bracket body is painted silver by default; please see the specific order details for special requirements.
2. Screws and other accessories conform to national standards; for special requirements, please refer to the specific order.

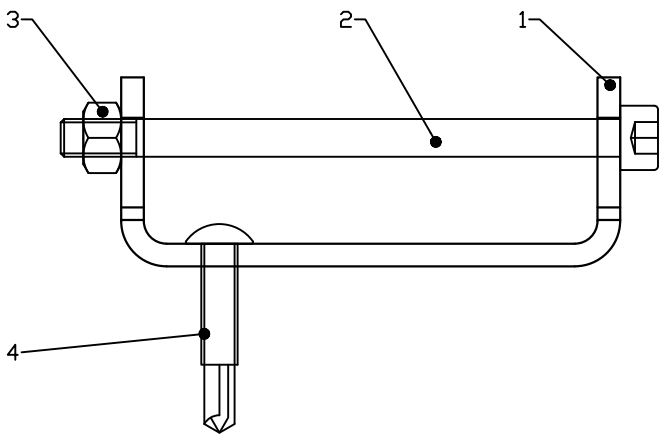

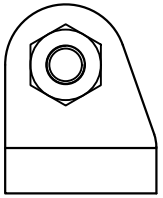

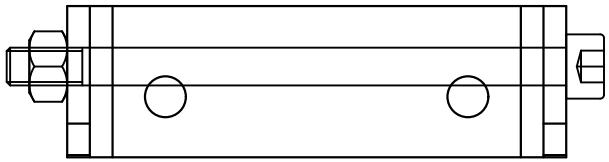

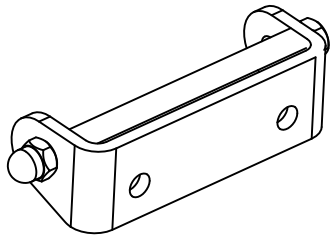

Actual product rendering

Applicable type	C40 series electric chain window opener
Applicable window type	Regular types
Installation location	Chain head window sash edge installation
Maximum push-pull force	800N
Packaging	Bulk, sealed in plastic bags, either with the motor or individually packaged.

S/No.	Product number	Part name	Specifications and models	quantity	Remark
4	210-0419	screw	Cross-head self-tapping drill bit ST4.8-16×25mm	2	
3	211-0502	screw	External hexagonal anti-loosening M5	1	
2	210-0512	screw	Hex socket head capM5×74mm	1	
1	270-1601	Bracket	66×20×25mm\T16	1	Note①

Product name	Bracket	Material		surface treatment	
Product number	9451-1600001	weight	XXg	D/No:	EH-C40-T1601
Specifications and models	EH-C40-T16	Proportion	1:1		
design		Edition	B1	unit: mm P/No. 1 / 2	Projection
Review					
Approve					

No tolerance noted	
X ±0.3	X ±2°
.X ±0.15	.X ±1°
.XX ±0.05	.XX ±0.5°
.XXX ±0.02	
Unmarked C-angle C0.3	Unmarked R angle R0.3

* For details not marked with a note, please refer to the 3D image file Path:

EH-C40-T1701

Mark	Number of places	Content before change	Content after changes	Sign	Year, Month, Day

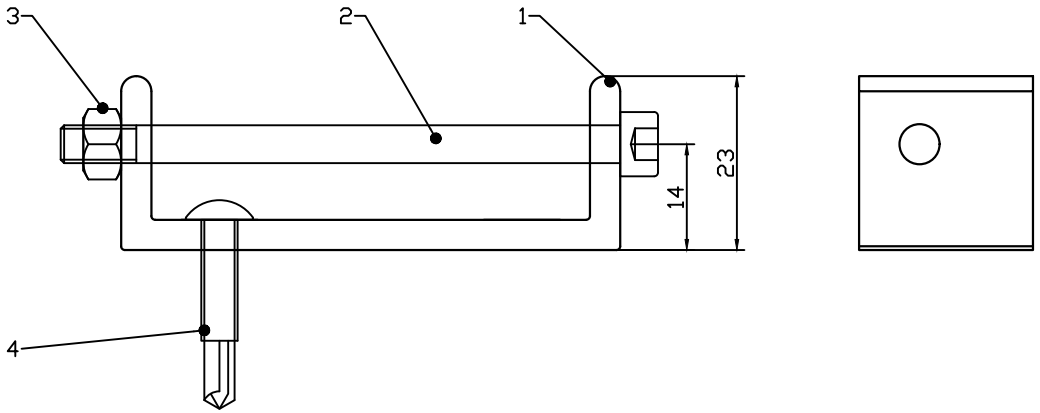

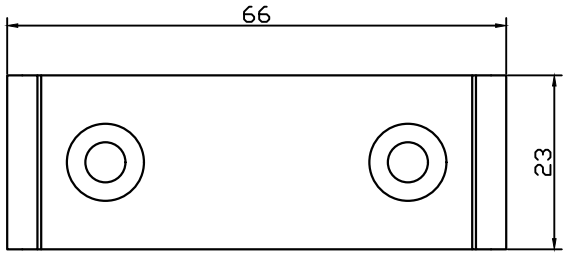

Technical Requirements:

1. The Bracket body is anodized silver by default; for special orders, please see the specific order details.

2. Screws and other accessories conform to national standards; for special requirements, please refer to the specific order.

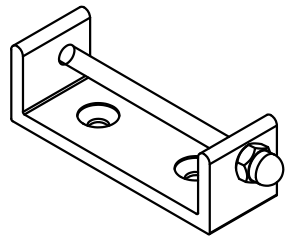

Actual product rendering

Applicable type	C40 series electric chain window opener
Applicable window type	Regular types
Installation location	Chain head window sash edge installation
Maximum push-pull force	500N
Packaging	Bulk, sealed in plastic bags, either with the motor or individually packaged.

S/No.	Product number	Part name	Specifications and models	quantity	Remark
4	210-0419	screw	Cross-head self-tapping drill bit ST4.8-16×25mm	2	
3	211-0502	screw	External hexagonal anti-loosening M5	1	
2	210-0512	screw	Hex socket head capM5×74mm	1	
1	8112-1701021	Bracket	66×23×20mm\T17	1	Note①

Product name	Bracket		Material		surface treatment				
Product number	9451-1700001		weight	XXg	D/No:	EH-C40-T1701			
Specifications and models	EH-C40-T17		Proportion	1:1					
design			Edition	B1	unit	mm	P/No.	1 / 2	Projection
Review			-						
Approve									

No tolerance noted	
X ±0.3	X ±2°
.X ±0.15	.X ±1°
.XX ±0.05	.XX ±0.5°
.XXX ±0.02	
Unmarked C-angle C0.3	Unmarked R angle R0.3

* For details not marked with a note, please refer to the 3D image file Path:

EH-C40-T1801

Mark	Number of places	Content before change	Content after changes	Sign	Year, Month, Day

Technical Requirements:

1. The Bracket body is painted silver by default; please see the specific order details for special requirements.
2. Screws and other accessories conform to national standards; for special requirements, please refer to the specific order.

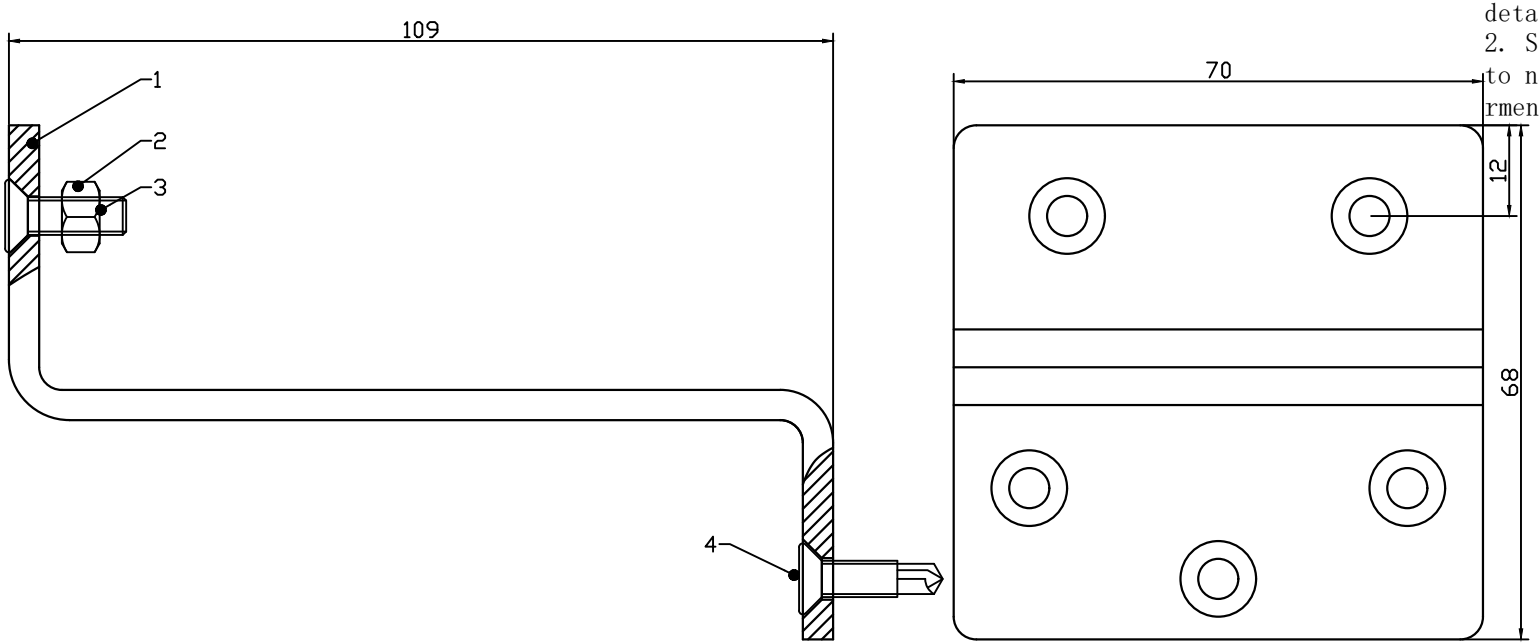

Applicable type	C40 series electric chain window opener
Applicable window type	tilt-and-turn window
Installation location	Chain head window sash edge installation
Maximum push-pull force	600N
Packaging	Bulk, sealed plastic bags, individually packaged

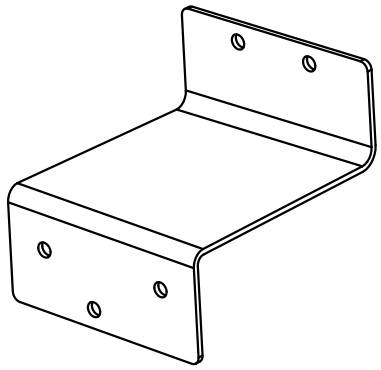

Actual product rendering

S/No.	Product number	Part name	Specifications and models	quantity	Remark
4	210-0417	screw	Cross-shaped countersunk drill shank self-tappingST4.8-16×19mm	3	
3	211-0501	nut	external hexagon M5	2	
2	210-0519	screw	cross headM5×16mm	2	
1	8270-1801131	Bracket	109×68×70mm\T18\Ztype\Fall inwards	1	Note①

Product name	Bracket	Material		surface treatment	
Product number	9451-1400001	weight	XXg	D/No:	EH-C40-T1801
Specifications and models	EH-C35-T14	Proportion	1:1		
design		Edition	B1	unit: mm P/No. 1 / 2	Projection
Review					
Approve					

No tolerance noted	
X ±0.3	X ±2°
.X ±0.15	.X ±1°
.XX ±0.05	.XX ±0.5°
.XXX ±0.02	
Unmarked C-angle C0.3	Unmarked R angle R0.3

* For details not marked with a note, please refer to the 3D image file Path:

EH-A35-T2501

Mark	Number of places	Content before change	Content after changes	Sign	Year, Month, Day

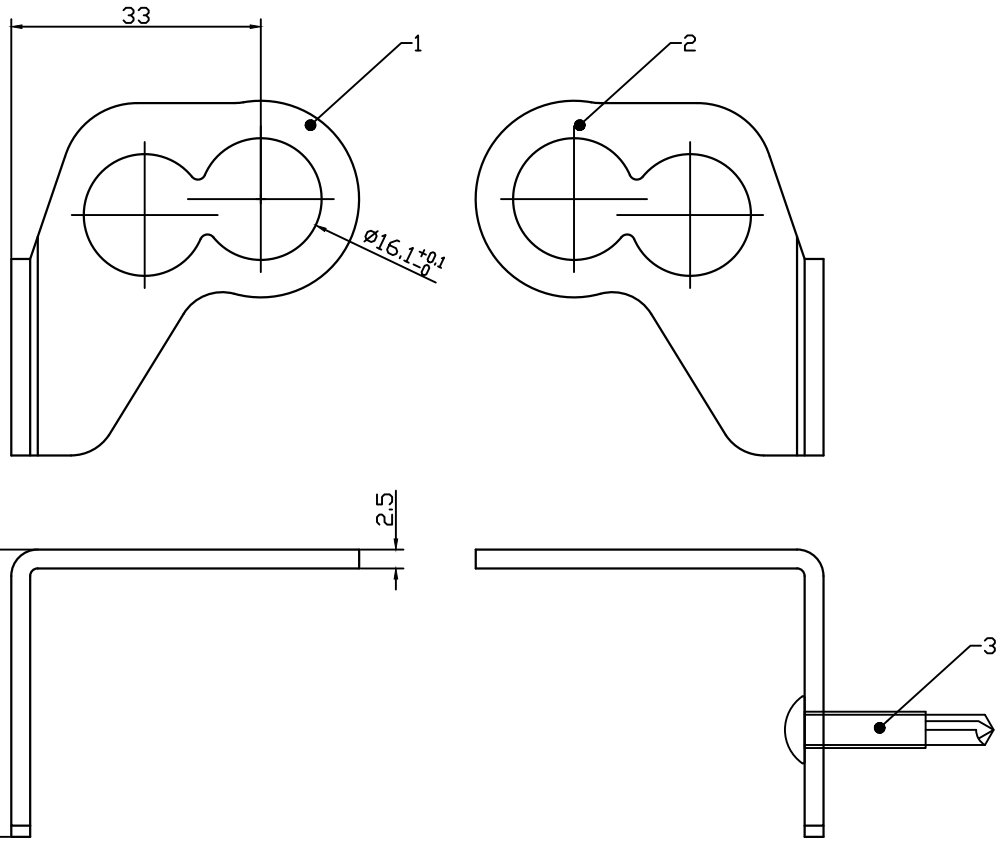

Technical Requirements:

1. The Bracket body is painted silver by default; please see the specific order details for special requirements.
2. Screws and other accessories conform to national standards; for special requirements, please refer to the specific order.

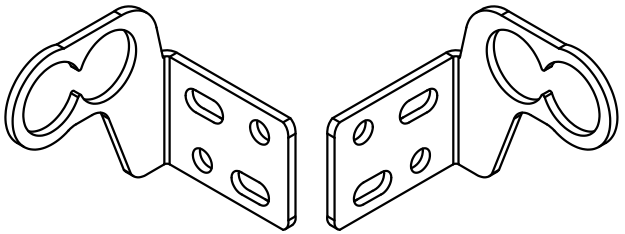

Actual product rendering

Applicable type	A35 series hand-cranked chain window opener
Applicable window type	Regular types
Installation location	Install the end caps on both sides of the fuselage
Maximum push-pull force	600N
Packaging	Bulk, sealed in plastic bags, either with the motor or individually packaged.

S/No.	Product number	Part name	Specifications and models	quantity	Remark
3	210-0419	screw	Cross-head self-tapping drill bit ST4.8-16×25mm	8	
2	270-2526	Bracket	46(33)×46.9×40mm\T25\ right	1	
1	270-2525	Bracket	46(33)×46.9×40mm\T25\ Left	1	Note①

Product name	Bracket		Material		surface treatment		
Product number	9451-2500001		weight	xxg	D/No:	EH-A35-T2501	
Specifications and models	EH-A35-T25		Proportion	1:1			
design			Edition	B1	unit	mm	P/No. 1 / 3	Projection
Review			-				
Approve							

No tolerance noted	
X ±0.3	X ±2°
.X ±0.15	.X ±1°
.XX ±0.05	.XX ±0.5°
.XXX ±0.02	
Unmarked C-angle C0.3	Unmarked R angle R0.3

* For details not marked with a note, please refer to the 3D image file Path:

EH-C40-T2601

Mark	Number of places	Content before change	Content after changes	Sign	Year, Month, Day

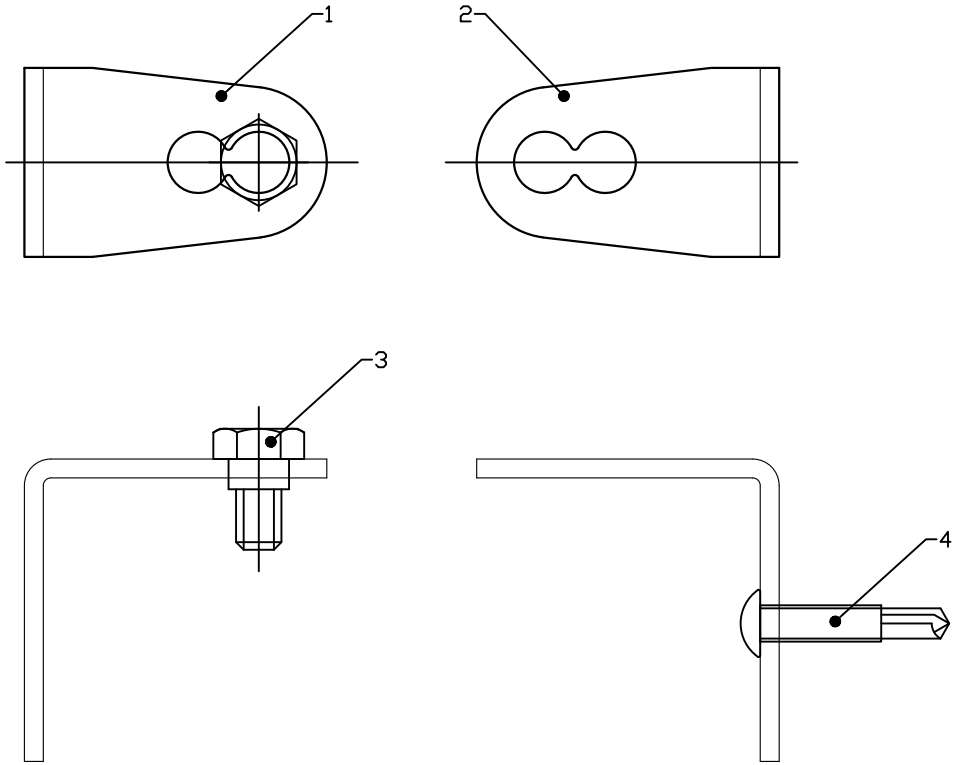

Technical Requirements:

1. The Bracket body is painted silver by default; please see the specific order details for special requirements.
2. Screws and other accessories conform to national standards; for special requirements, please refer to the specific order.

Actual product rendering

Applicable type	C40 series electric chain window opener
Applicable window type	Regular types
Installation location	Install the end caps on both sides of the fuselage
Maximum push-pull force	800N
Packaging	Bulk, sealed in plastic bags, either with the motor or individually packaged.

S/No.	Product number	Part name	Specifications and models	quantity	Remark
4	210-0419	screw	Cross-head self-tapping drill bit ST4.8-16×25mm	6	
3	210-0604	screw	external hexagonal steps φ8×12-M6×8mm	2	
2	270-2602	Bracket	59×57×41mm\T15\right	1	
1	270-2601	Bracket	59×57×41mm\T15\Left	1	Note①

Product name	Bracket	Material		surface treatment	
Product number	9451-2600001	weight	xxg	D/No:	EH-C40-T2601
Specifications and models	EH-C40-T26	Proportion	1:1		
design		Edition	B1	unit: mm	P/No. 1 / 4
Review					Projection
Approve					

No tolerance noted	
X ±0.3	X ±2°
.X ±0.15	.X ±1°
.XX ±0.05	.XX ±0.5°
.XXX ±0.02	
Unmarked C-angle C0.3	Unmarked R angle R0.3

* For details not marked with a note, please refer to the 3D image file Path:

EH-A35-T2801

Mark	Number of places	Content before change	Content after changes	Sign	Year, Month, Day

Technical Requirements:

1. The default surface treatment for the bracket body is anodizing. For special requirements, please refer to the specific order.
2. Screws and other accessories conform to national standards; for special requirements, please refer to the specific order.

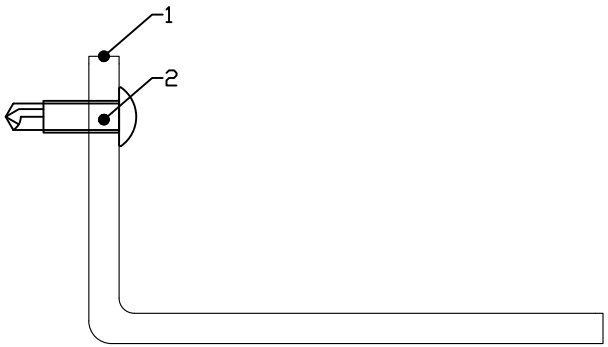

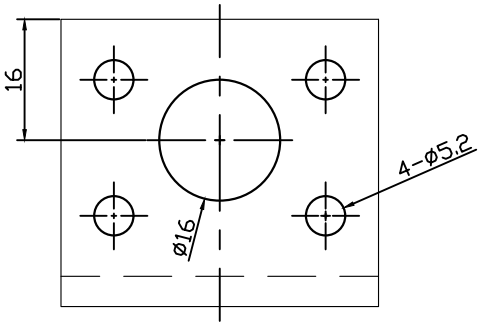

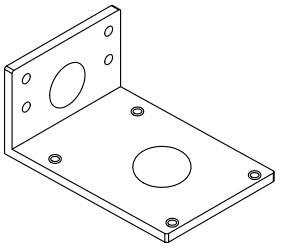

Actual product rendering

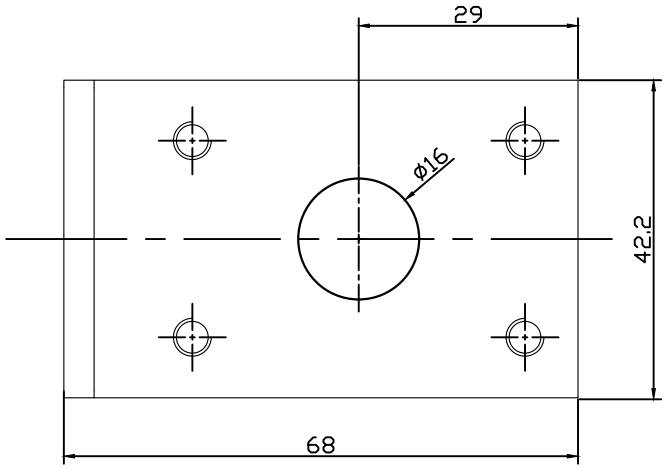

Applicable type	Manual chain window opener steering gear series
Applicable window type	
Installation location	Steering gear base
Maximum push-pull force	
Packaging	Bulk, sealed in plastic bags, packaged with steering gear

S/No.	Product number	Part name	Specifications and models	quantity	Remark
2	210-0415	screw	Cross-head self-tapping drill bit ST4.2-10×15mm	2	
1	8112-2801021	Bracket	68×42×38mm\T28	1	Note①

Product name	Bracket		Material		surface treatment				
Product number	9451-2800001		weight	XXg	D/No:	EH-A35-T2801			
Specifications and models	EH-A35-T28		Proportion	1:1					
design			Edition	B1	unit	mm	P/No.	/	Projection
Review			-						
Approve									

No tolerance noted	
X ±0.3	X ±2°
.X ±0.15	.X ±1°
.XX ±0.05	.XX ±0.5°
.XXX ±0.02	
Unmarked C-angle C0.3	Unmarked R angle R0.3

* For details not marked with a note, please refer to the 3D image file Path:

EH-C28-T3101

Mark	Number of places	Content before change	Content after changes	Sign	Year, Month, Day

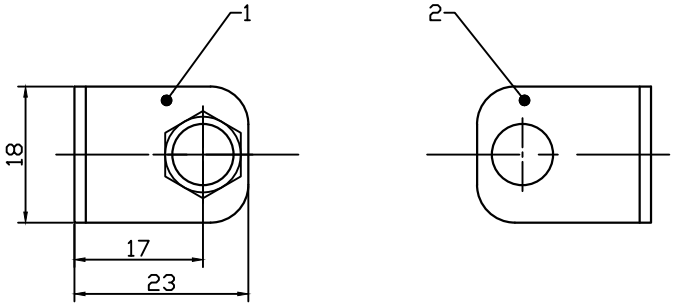

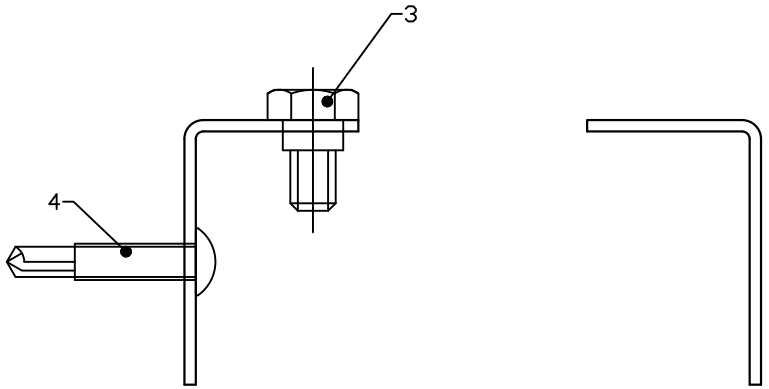

Technical Requirements:

1. The default surface treatment for the bracket body is anodizing. For special requirements, please refer to the specific order.
2. Screws and other accessories conform to national standards; for special requirements, please refer to the specific order.



Actual product rendering

Applicable type	Electric chain window opener C28 series
Applicable window type	Regular types
Installation location	Install the end caps on both sides of the fuselage
Maximum push-pull force	400N
Packaging	Bulk, sealed in plastic bags, either with the motor or individually packaged.

S/No.	Product number	Part name	Specifications and models	quantity	Remark
4	210-0419	screw	Cross-head self-tapping drill bit ST4.8-16×25mm	6	
3	210-0604	screw	external hexagonal steps φ8×12-M6×8mm	2	
2	270-3102	Bracket	35×23×18mm\T31\right	1	
1	270-3101	Bracket	35×23×18mm\T31\Left	1	Note①

Product name	Bracket		Material		surface treatment			
Product number	9451-3100001		weight	XXg	D/No:	EH-C28-T3101		
Specifications and models	EH-C28-T31		Proportion	1:1				
design			Edition	B1	unit	mm	P/No.	1 / 4	Projection
Review			-					
Approve								

No tolerance noted	
X ±0.3	X ±2°
.X ±0.15	.X ±1°
.XX ±0.05	.XX ±0.5°
.XXX ±0.02	
Unmarked C-angle C0.3	Unmarked R angle R0.3

* For details not marked with a note, please refer to the 3D image file Path:

EH-C40-T3601

Mark	Number of places	Content before change	Content after changes	Sign	Year, Month, Day

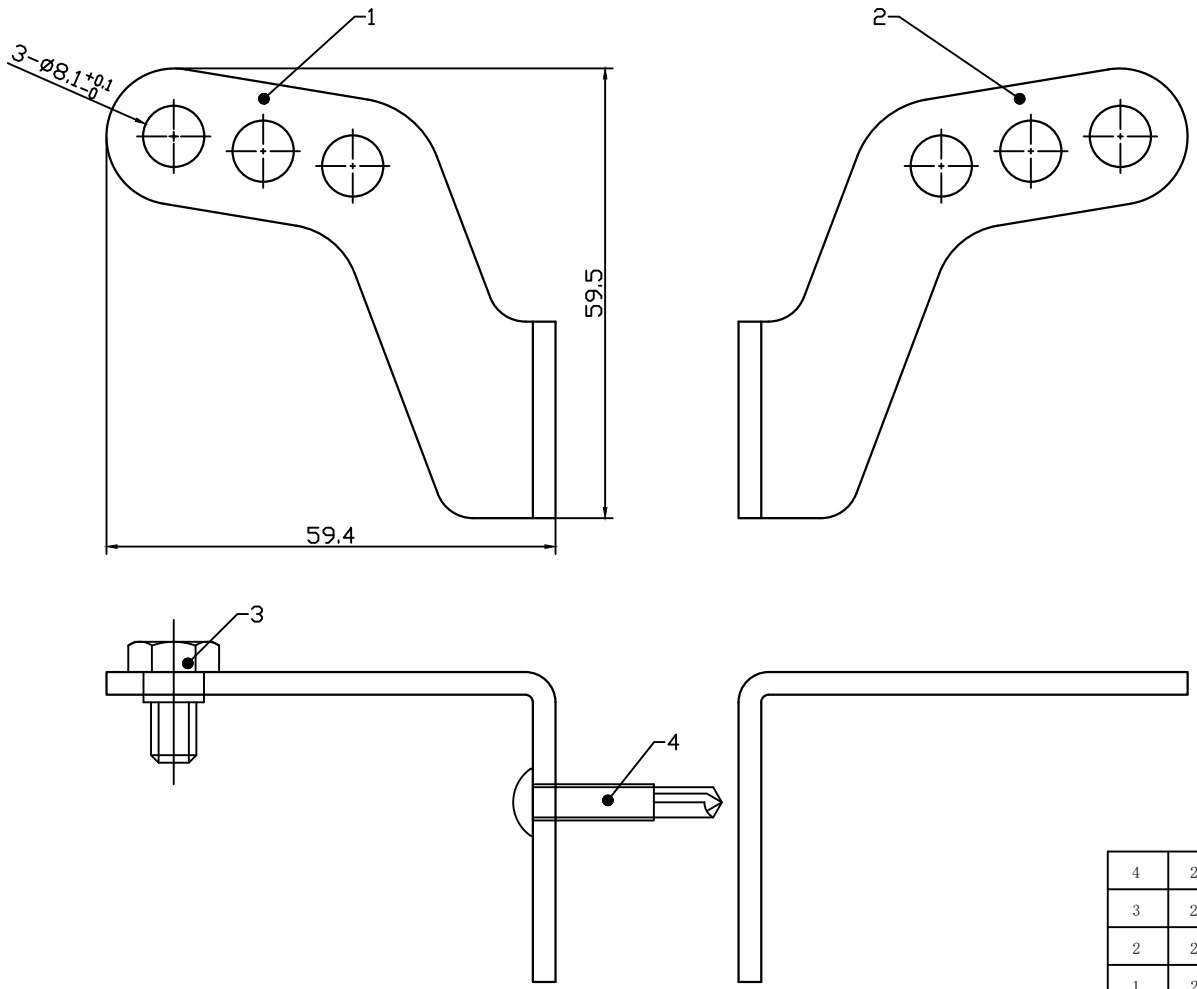

Technical Requirements:

1. The default surface treatment for the bracket body is anodizing. For special requirements, please refer to the specific order.
2. Screws and other accessories conform to national standards; for special requirements, please refer to the specific order.

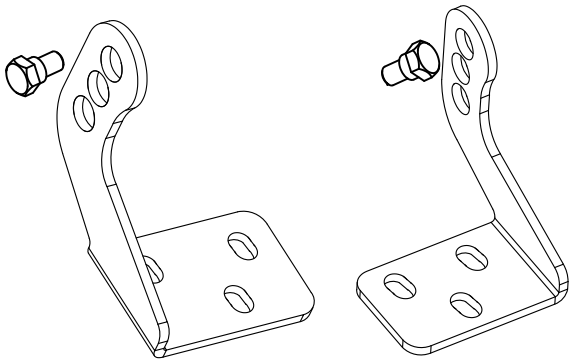

Actual product rendering

Applicable type	C40 series electric chain window opener
Applicable window type	Regular types
Installation location	Install the end caps on both sides of the fuselage
Maximum push-pull force	1000N
Packaging	Bulk, sealed in plastic bags, either with the motor or individually packaged.

S/No.	Product number	Part name	Specifications and models	quantity	Remark
4	210-0419	screw	Cross-head self-tapping drill bit ST4.8-16×25mm	6	
3	210-0604	screw	external hexagonal steps φ8×12-M6×8mm	2	
2	270-3602	Bracket	59×59×55mm\T36\right	1	
1	270-3601	Bracket	59×59×55mm\T36\Left	1	Note①

Product name	Bracket	Material		surface treatment	
Product number	9451-3600001	weight	xxg	D/No:	EH-C40-T3601
Specifications and models	EH-C40-T36	Proportion	1:1		
design		Edition	B1	unit: mm	P/No. 1 / 4
Review				Projection	
Approve					

No tolerance noted	
X ±0.3	X ±2°
.X ±0.15	.X ±1°
.XX ±0.05	.XX ±0.5°
.XXX ±0.02	
Unmarked C-angle C0.3	Unmarked R angle R0.3

* For details not marked with a note, please refer to the 3D image file Path:

HA-A40-T3701

Mark	Number of places	Content before change	Content after changes	Sign	Year, Month, Day

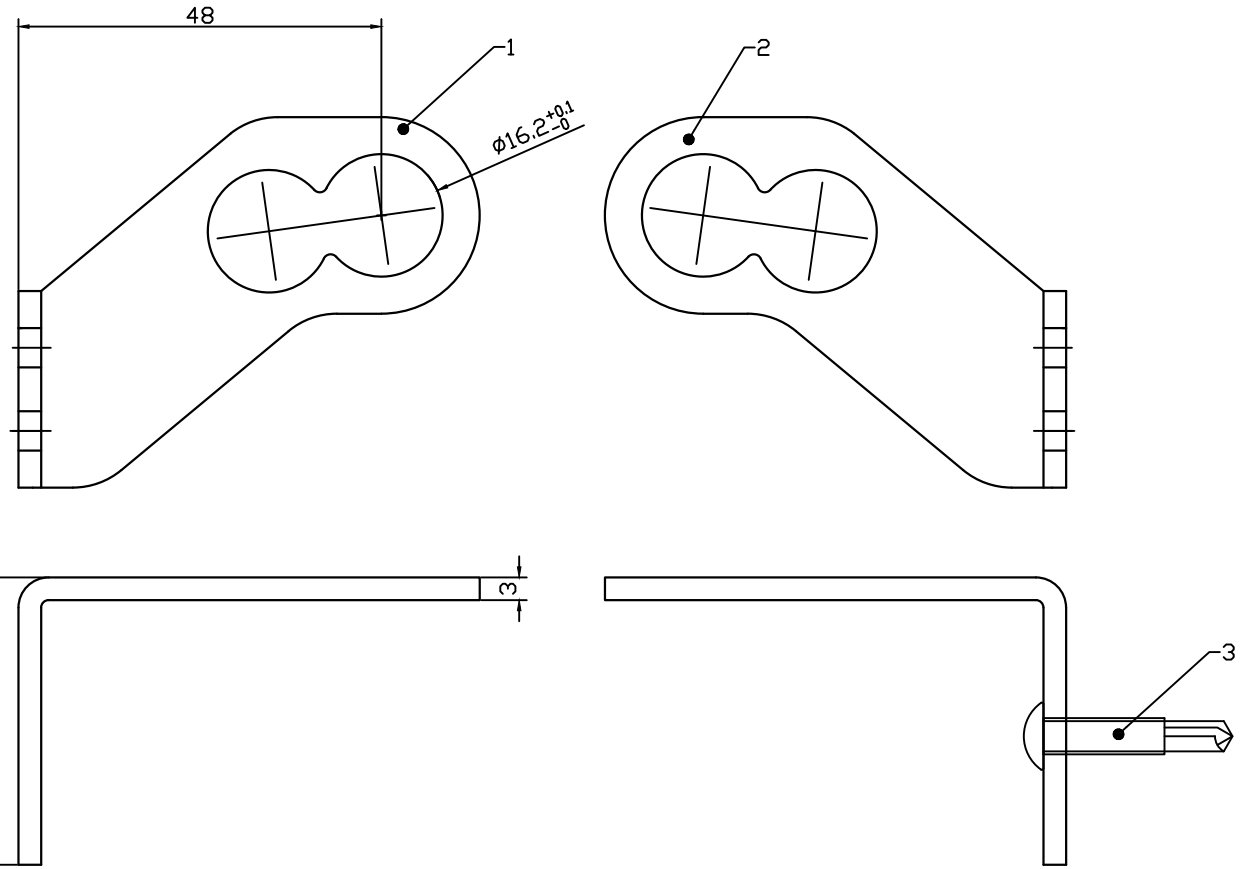

Technical Requirements:

1. The Bracket body is painted silver by default; please see the specific order details for special requirements.
2. Screws and other accessories conform to national standards; for special requirements, please refer to the specific order.

Actual product rendering

Applicable type	Hand-cranked chain window opener A40 series
Applicable window type	Regular types
Installation location	Install the end caps on both sides of the fuselage
Maximum push-pull force	800N
Packaging	Bulk, sealed in plastic bags, either with the motor or individually packaged.

S/No.	Product number	Part name	Specifications and models	quantity	Remark
3	210-0419	screw	Cross-head self-tapping drill bit ST4.8-16×25mm	8	
2	270-2506	Bracket	61(48)×49×38mm\right	1	
1	270-2505	Bracket	61(48)×49×38mm\Left	1	Note①

Product name	Bracket	Material		surface treatment	
Product number	9451-3700001	weight	xxg	D/No:	HA-A40-T3701
Specifications and models	EH-A35-T37A	Proportion	1:1		
design		Edition	B1	unit: mm	P/No. 1 / 3
Review				Projection	
Approve					

No tolerance noted			
X ±0.3	X ±2°		
.X ±0.15	.X ±1°		
.XX ±0.05	.XX ±0.5°		
.XXX ±0.02			
Unmarked C-angle C0.3	Unmarked R angle R0.3		

* For details not marked with a note, please refer to the 3D image file Path:

EH-L36-T3801

Mark	Number of places	Content before change	Content after changes	Sign	Year, Month, Day

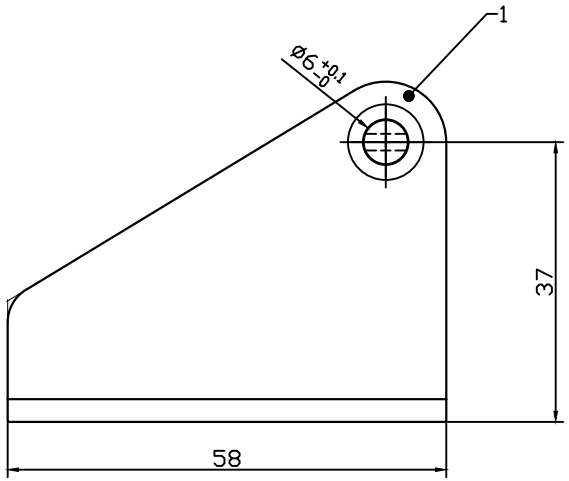

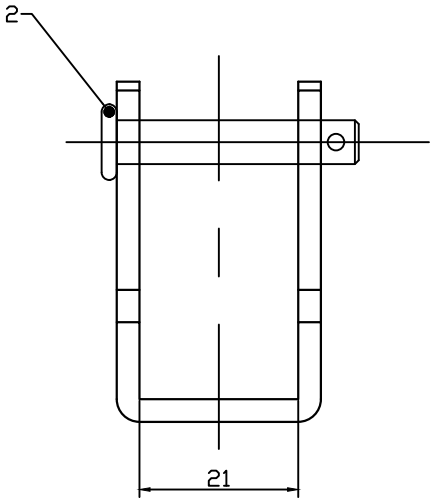

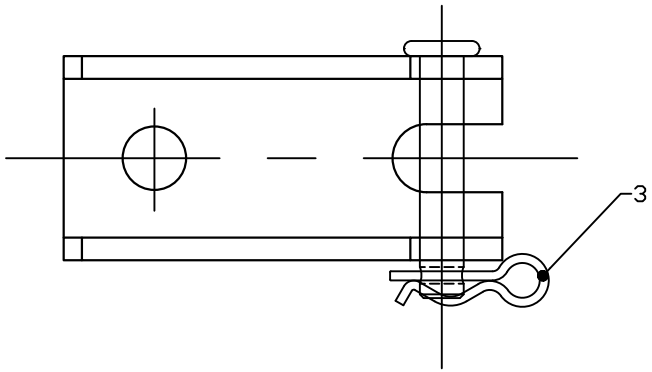

Technical Requirements:

1. The Bracket body is painted silver by default; please see the specific order details for special requirements.
2. Screws and other accessories conform to national standards; for special requirements, please refer to the specific order.

Applicable type	L36 Series Electric Screw Window Opener Electric screw window opener B40 series
Applicable window type	Regular types
Installation location	Front push rod headInstall
Maximum push-pull force	600N
Packaging	Bulk, sealed in plastic bags, either with the motor or individually packaged.

S/No.	Product number	Part name	Specifications and models	quantity	Remark
3	213-0101	pin轴	Φ1.2×21mm\Bshapepin	1	
2	213-0504	pin轴	Φ10×Φ5.8×34mm\Tshapewith holes	1	
1	270-3801	Bracket	58×45×27mm\inclineUshape\T38	1	Note①

Product name	Bracket		Material		surface treatment			
Product number	9451-3800001		weight	XXXg	D/No:	EH-L36-T3801		
Specifications and models	EH-L36-T38		Proportion	1:1				
design			Edition	B1	unit	mm	P/No.	/	Projection
Review			-					
Approve								

No tolerance noted	
X ±0.3	X ±2°
.X ±0.15	.X ±1°
.XX ±0.05	.XX ±0.5°
.XXX ±0.02	
Unmarked C-angle C0.3	Unmarked R angle R0.3

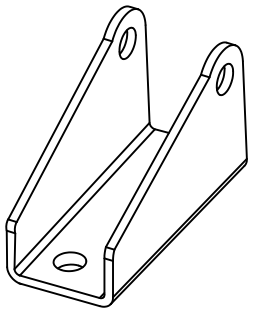

Actual product rendering

* For details not marked with a note, please refer to the 3D image file Path:

EH-T36-T3901

Mark	Number of places	Content before change	Content after changes	Sign	Year, Month, Day

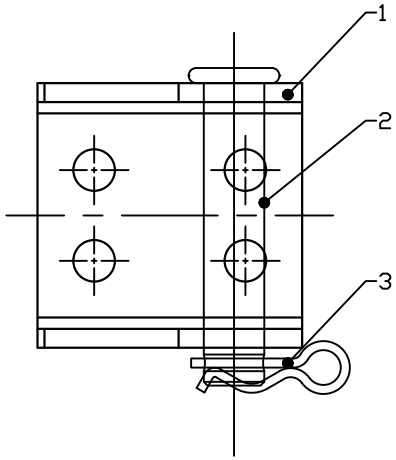

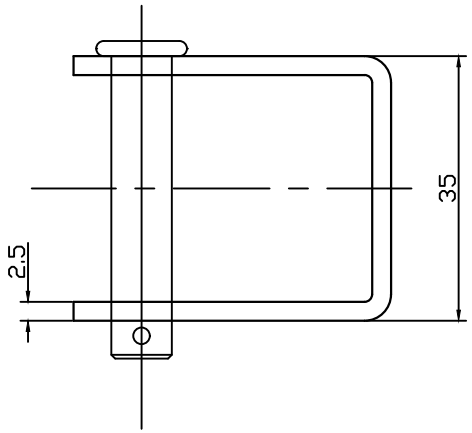

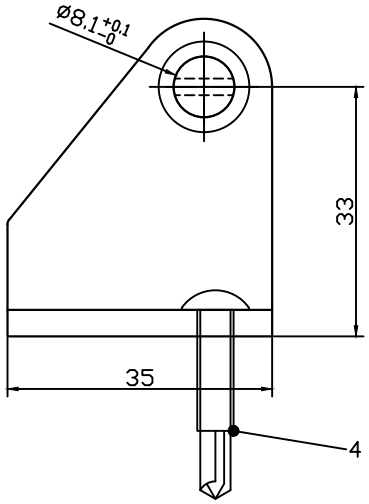

Technical Requirements:

1. The Bracket body is painted silver by default; please see the specific order details for special requirements.
2. Screws and other accessories conform to national standards; for special requirements, please refer to the specific order.

Applicable type	T36 Series Electric Screw Window Opener
Applicable window type	Regular types
Installation location	Front push rod headInstall
Maximum push-pull force	1200N
Packaging	Bulk, sealed in plastic bags, either with the motor or individually packaged.

S/No.	Product number	Part name	Specifications and models	quantity	Remark
4	210-0419	screw	Cross-head self-tapping drill bit ST4.8-16×25mm	4	
3	213-0101	pin轴	φ1.2×21mm\Bshapepin	1	
2	213-0801	pin轴	φ12×φ8×42mm\Tshapewith holes	1	
1	270-3901	Bracket	42×35×35mm\Ushape\T39	1	Note①

Product name	Bracket		Material		surface treatment				
Product number	9451-3900001		weight	XXXg	D/No:	EH-T36-T3901			
Specifications and models	EH-T36-T39		Proportion	1:1					
design			Edition	B1	unit	mm	P/No.	/	Projection
Review			-						
Approve									

No tolerance noted	
X ±0.3	X ±2°
.X ±0.15	.X ±1°
.XX ±0.05	.XX ±0.5°
.XXX ±0.02	
Unmarked C-angle C0.3	Unmarked R angle R0.3

Actual product rendering

* For details not marked with a note, please refer to the 3D image file Path:

EH-B43-T4001

Mark	Number of places	Content before change	Content after changes	Sign	Year, Month, Day

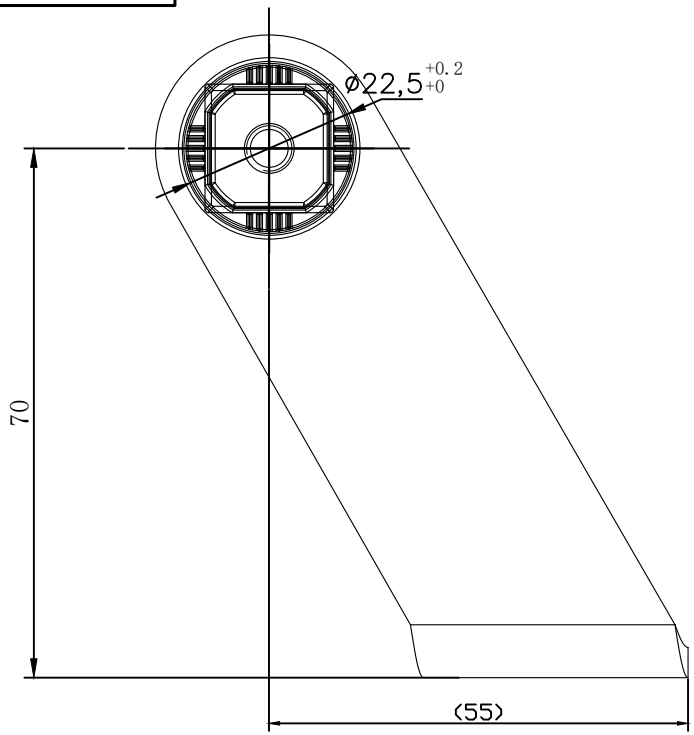

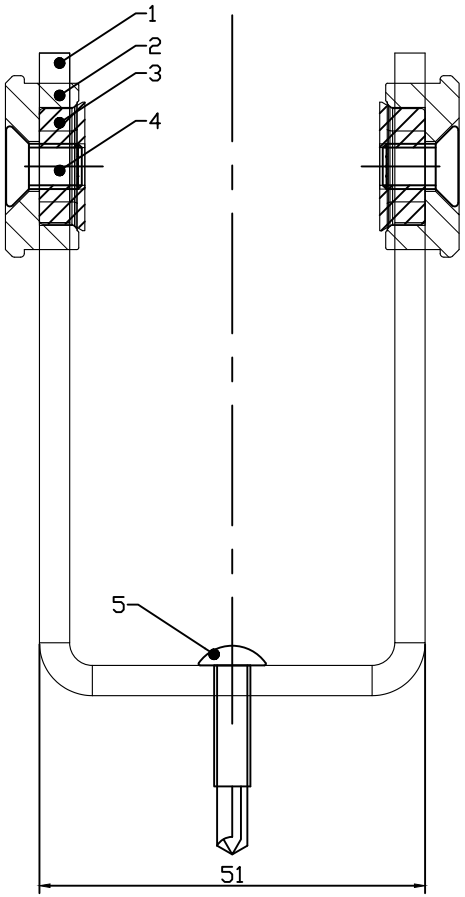

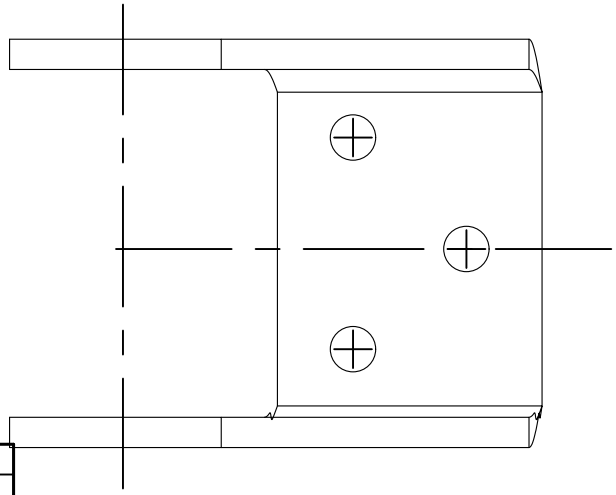

Technical Requirements:

1. The Bracket body is blue zinc plated by default; for special cases, please see the specific order details.

2. Screws and other accessories conform to national standards; for special requirements, please refer to the specific order.

Applicable type	Electric louvered window opener B43 series
Applicable window type	Regular types
Installation location	Side Install
Maximum push-pull force	600N
Packaging	Bulk, sealed in plastic bags, either with the motor or individually packaged.

S/No.	Product number	Part name	Specifications and models	quantity	Remark
5	210-0623	screw	cross headM6×10mm	2	
4	210-0419	screw	Cross-head self-tapping drill bit ST4.8-16×25mm	3	
3	211-0604	nut	Ttype\Outer Sifang17×17×6mm\M6	2	
2	239-0040	Brackettransfer	Φ24×9.7mm\B43\back\T40	2	
1	270-4001	Bracket	85×55×51mm\B43\back\T40	1	Note①

Product name	Bracket		Material		surface treatment				
Product number	9451-4000001		weight	XXXg	D/No:	EH-B43-T4001			
Specifications and models	EH-B43-T40		Proportion	1:1					
design			Edition	B1	unit	mm	P/No.	/	Projection
Review			-						
Approve									

No tolerance noted	
X ±0.3	X ±2°
.X ±0.15	.X ±1°
.XX ±0.05	.XX ±0.5°
.XXX ±0.02	
Unmarked C-angle C0.3	Unmarked R angle R0.3

Actual product rendering

* For details not marked with a note, please refer to the 3D image file Path:

EH-B43-T4101

Mark	Number of places	Content before change	Content after changes	Sign	Year, Month, Day

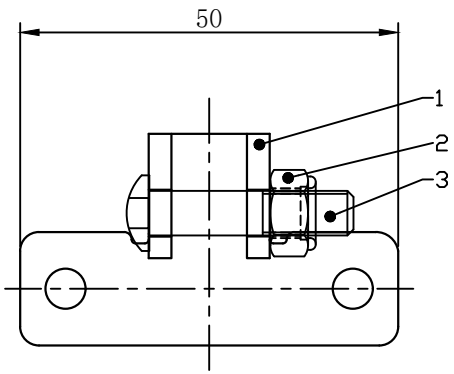

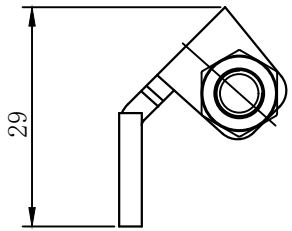

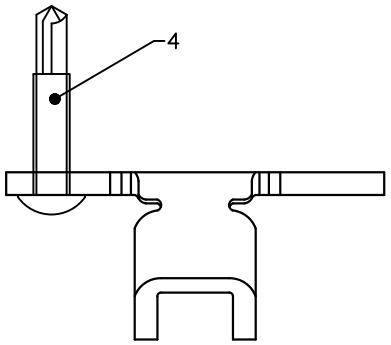

Technical Requirements:

1. The Bracket body is painted silver by default; please see the specific order details for special requirements.
2. Screws and other accessories conform to national standards; for special requirements, please refer to the specific order.

Actual product rendering

Applicable type	Electric louvered window opener B43 series
Applicable window type	Regular types
Installation location	Top club head Install
Maximum push-pull force	600N
Packaging	Bulk, sealed in plastic bags, either with the motor or individually packaged.

S/No.	Product number	Part name	Specifications and models	quantity	Remark
4	210-0419	screw	Cross-head countersunk drill bit self-tapping ST4.8-16×25mm	2	
3	210-0607	screw	M6×27 (12) mm Internal Hex Head Round Head (Half-Thread)	1	
2	211-0602	nut	External hexagonal anti-loosening M6	1	
1	270-4101	Bracket	50×29×22mm\B43\forward\T41	1	Note①

Product name	Bracket	Material		surface treatment	
Product number	9451-4100001	weight	XXg	D/No:	EH-B43-T4101
Specifications and models	EH-B43-T41	Proportion	1:1		
design		Edition	B1	unit: mm	P/No.: / Projection
Review		-			
Approve					

No tolerance noted	
X ±0.3	X ±2°
.X ±0.15	.X ±1°
.XX ±0.05	.XX ±0.5°
.XXX ±0.02	
Unmarked C-angle C0.3	Unmarked R angle R0.3

* For details not marked with a note, please refer to the 3D image file Path:

EH-A40-T4201

Mark	Number of places	Content before change	Content after changes	Sign	Year, Month, Day

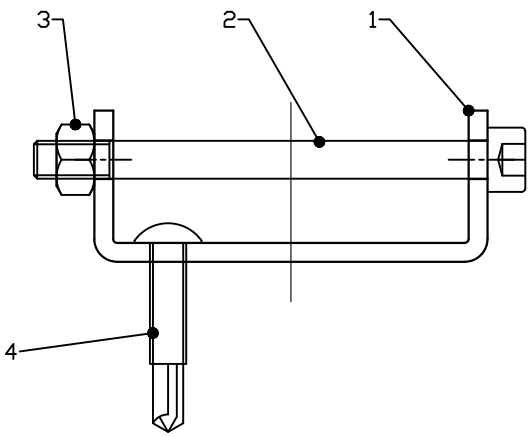

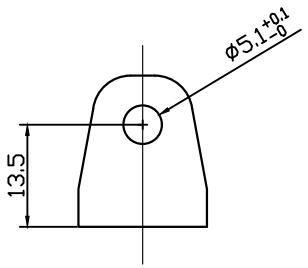

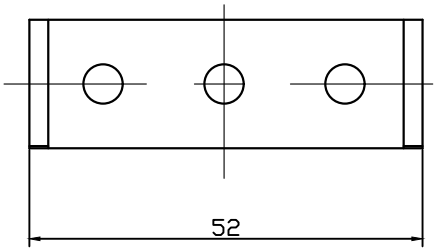

Technical Requirements:

1. The Bracket body is painted silver by default; please see the specific order details for special requirements.
2. Screws and other accessories conform to national standards; for special requirements, please refer to the specific order.

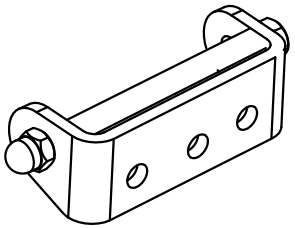

Actual product rendering

Applicable type	Electric chain window opener A40 series
Applicable window type	Regular types
Installation location	Chain head window sash edge installation
Maximum push-pull force	800N
Packaging	Bulk, sealed in plastic bags, either with the motor or individually packaged.

S/No.	Product number	Part name	Specifications and models	quantity	Remark
4	210-0419	screw	Cross-head self-tapping drill bit ST4.8-16×25mm	2	
3	211-0502	screw	External hexagonal anti-loosening M5	1	
2	210-0515	screw	Hex socket head capM5×60mm	1	
1	270-4201	Bracket	52×17×20mm\T42	1	Note①

Product name	Bracket		Material		surface treatment			
Product number	9451-4200001		weight	XXg	D/No:	EH-A40-T4201		
Specifications and models	EH-A40-T42		Proportion	1:1				
design			Edition	B1	unit	mm	P/No.	1 / 2	Projection
Review			-					
Approve								

No tolerance noted	
X ±0.3	X ±2°
.X ±0.15	.X ±1°
.XX ±0.05	.XX ±0.5°
.XXX ±0.02	
Unmarked C-angle C0.3	Unmarked R angle R0.3

* For details not marked with a note, please refer to the 3D image file Path:

EH-T28-T4301

Mark	Number of places	Content before change	Content after changes	Sign	Year, Month, Day

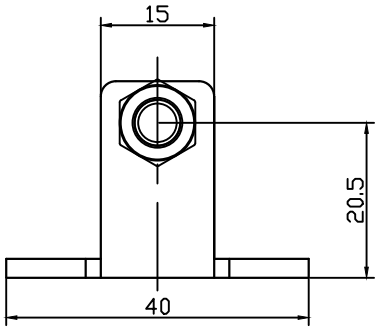

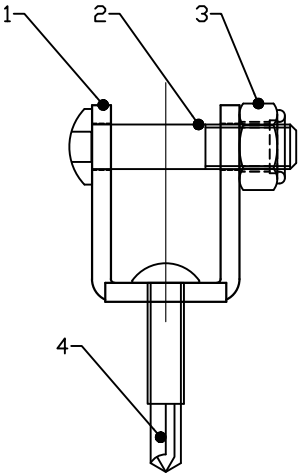

Technical Requirements:

1. The Bracket body is painted silver by default; please see the specific order details for special requirements.
2. Screws and other accessories conform to national standards; for special requirements, please refer to the specific order.

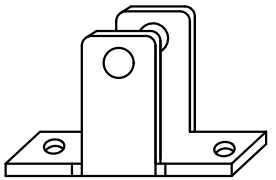

Actual product rendering

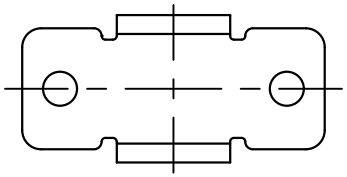

Applicable type	T28 Series Electric Chain Window Opener
Applicable window type	Regular types
Installation location	Top club head Install
Maximum push-pull force	1000N
Packaging	Bulk, sealed in plastic bags, either with the motor or individually packaged.

S/No.	Product number	Part name	Specifications and models	quantity	Remark
4	210-0420	screw	Cross-head self-tapping drill bit ST4.2-18×25mm	2	
3	211-0602	screw	External hexagonal anti-loosening M6	1	
2	210-0607	screw	M6×27 (12) Socket head cap round head (half thread)	1	
1	270-4301	Bracket	40×19.5×26mm\T43	1	Note①

Product name	Bracket		Material		surface treatment			
Product number	9451-4300001		weight	XXg	D/No:	EH-T28-T4301		
Specifications and models	EH-T28-T43		Proportion	1:1				
design			Edition	B1	unit	mm	P/No.	1 / 2	Projection
Review			-					
Approve								

No tolerance noted	
X ±0.3	X ±2°
.X ±0.15	.X ±1°
.XX ±0.05	.XX ±0.5°
.XXX ±0.02	
Unmarked C-angle C0.3	Unmarked R angle R0.3

* For details not marked with a note, please refer to the 3D image file Path:

EH-T28-T4401

Mark	Number of places	Content before change	Content after changes	Sign	Year, Month, Day

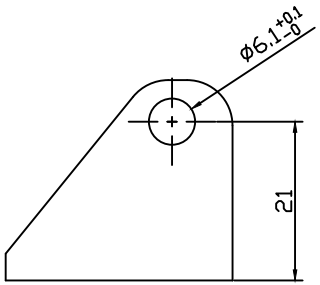

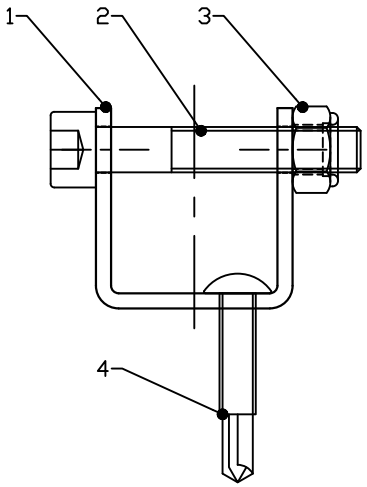

Technical Requirements:

1. The Bracket body is painted silver by default; please see the specific order details for special requirements.
2. Screws and other accessories conform to national standards; for special requirements, please refer to the specific order.

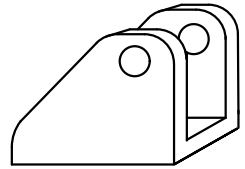

Actual product rendering

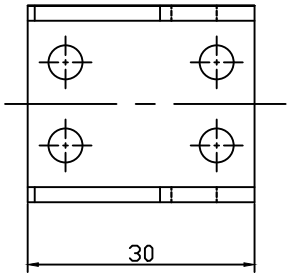

Applicable type	T28 Series Electric Chain Window Opener
Applicable window type	Regular types
Installation location	Top club head Install
Maximum push-pull force	1000N
Packaging	Bulk, sealed in plastic bags, either with the motor or individually packaged.

S/No.	Product number	Part name	Specifications and models	quantity	Remark
4	210-0420	screw	Cross-head self-tapping drill bit ST4.2-18×25mm	2	
3	211-0602	screw	External hexagonal anti-loosening M6	1	
2	210-0608	screw	M6×35 Socket Hex Head	1	
1	270-4401	Bracket	30×26.5×26mm\T44	1	Note①

Product name	Bracket		Material		surface treatment			
Product number	9451-4400001		weight	XXg	D/No:	EH-T28-T4401		
Specifications and models	EH-T28-T44		Proportion	1:1				
design			Edition	B1	unit	mm	P/No.	1 / 2	Projection
Review								
Approve								

No tolerance noted	
X ±0.3	X ±2°
.X ±0.15	.X ±1°
.XX ±0.05	.XX ±0.5°
.XXX ±0.02	
Unmarked C-angle C0.3	Unmarked R angle R0.3

* For details not marked with a note, please refer to the 3D image file Path:

EH-L36-T4501

Mark	Number of places	Content before change	Content after changes	Sign	Year, Month, Day

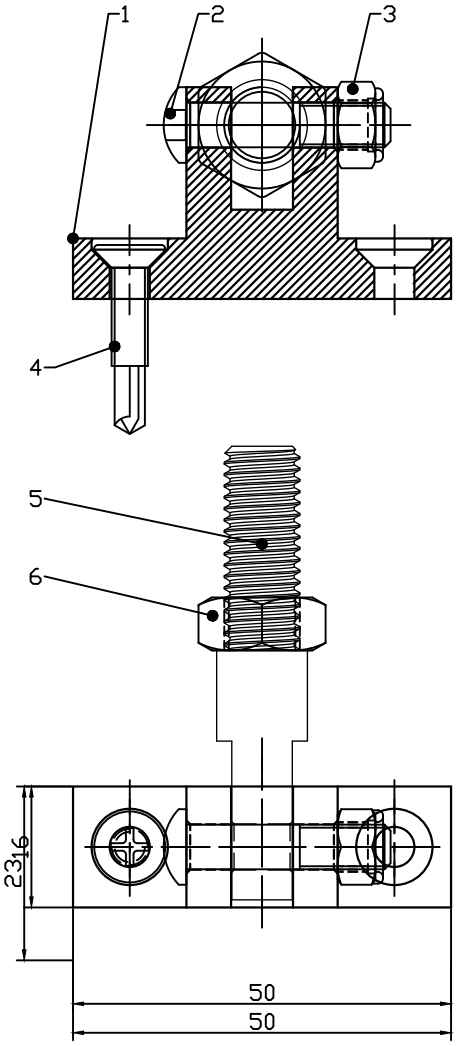

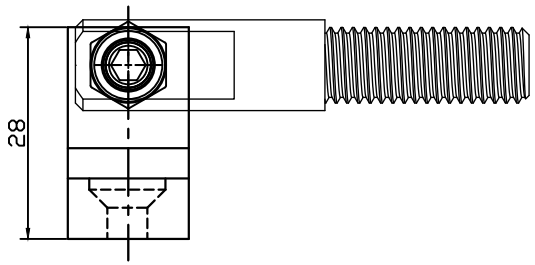

Technical Requirements:

1. The default surface treatment for the bracket body is anodizing. For special requirements, please refer to the specific order.
2. Screws and other accessories conform to national standards; for special requirements, please refer to the specific order.

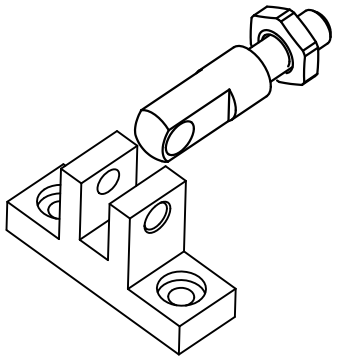

Actual product rendering

Applicable type	Electric screw window opener L36/L45 series
Applicable window type	Regular types
Installation location	Front push rod head
Maximum push-pull force	1000N
Packaging	Bulk, sealed in plastic bags, either with the motor or individually packaged.

S/No.	Product number	Part name	Specifications and models	quantity	Remark
6	211-1001	screw	External hexagon M10	1	
5	239-0002	connecting bolts	φ12×60mm Single-start thread M10×27	1	
4	210-0418	screw	Cross-head countersunk drill bit self-tapping ST4.8-16×25mm	2	
3	211-0602	nut	External hexagonal anti-loosening M6	1	
2	210-0607	screw	M6×27 (12) mm Internal Hex Head Round Head (Half-Thread)	1	
1	8112-0101131	Bracket	50×28×16mm \T1	1	Note①

Product name	Bracket		Material		surface treatment				
Product number	9451-4500001		weight	71.4g	D/No:	EH-L36-T4501			
Specifications and models	EH-L36-T45		Proportion	1:1					
design			Edition	B1	unit	mm	P/No.	/	Projection
Review			-						
Approve									

No tolerance noted			
X	±0.3	X	±2°
.X	±0.15	.X	±1°
.XX	±0.05	.XX	±0.5°
.XXX	±0.02		
Unmarked C-angle C0.3		Unmarked R angle R0.3	

* For details not marked with a note, please refer to the 3D image file Path:

HA-A40-T4601

Mark	Number of places	Content before change	Content after changes	Sign	Year, Month, Day

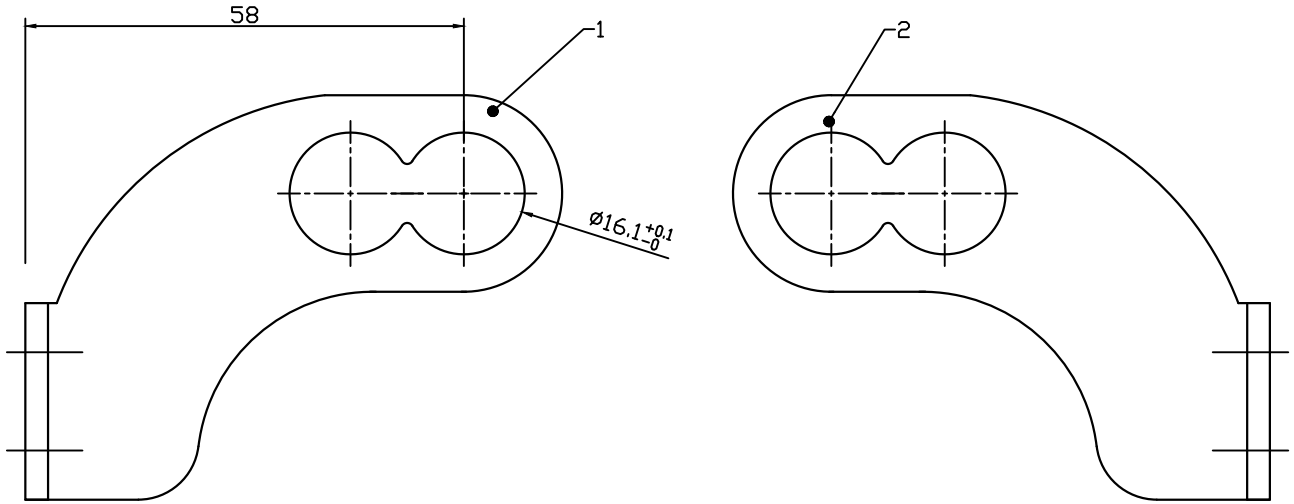

Technical Requirements:

1. The Bracket body is painted silver by default; please see the specific order details for special requirements.
2. Screws and other accessories conform to national standards; for special requirements, please refer to the specific order.

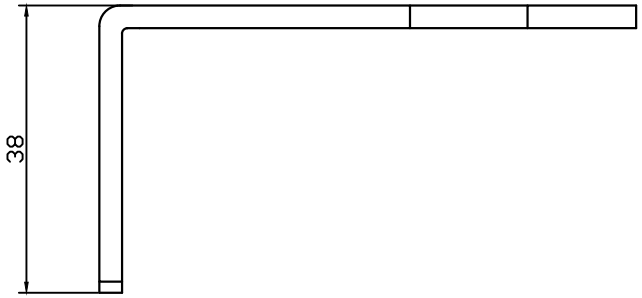

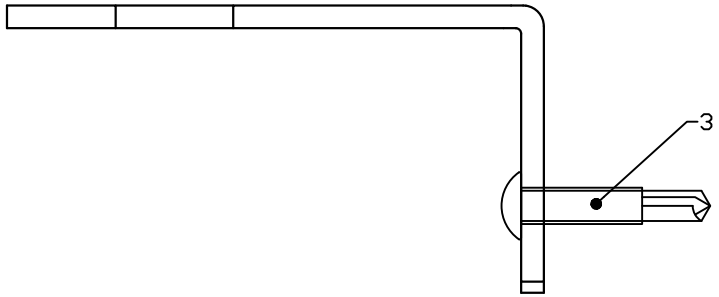

Actual product rendering

Applicable type	Hand-cranked chain window opener A40 series
Applicable window type	Regular types
Installation location	Install the end caps on both sides of the fuselage
Maximum push-pull force	800N
Packaging	Bulk, sealed in plastic bags, either with the motor or individually packaged.

S/No.	Product number	Part name	Specifications and models	quantity	Remark
3	210-0419	screw	Cross-head self-tapping drill bit ST4.8-16×25mm	8	
2	270-4602	Bracket	71(58)×53.5×40mm\right	1	
1	270-4601	Bracket	71(58)×53.5×40mm\Left	1	Note①

Product name	Bracket	Material		surface treatment	
Product number	9451-4600001	weight	xxg	D/No:	HA-A40-T4601
Specifications and models	EH-A35-T46	Proportion	1:1		
design		Edition	B1	unit: mm	P/No. 1 / 3
Review				Projection	
Approve					

No tolerance noted			
X ±0.3	X ±2°		
.X ±0.15	.X ±1°		
.XX ±0.05	.XX ±0.5°		
.XXX ±0.02			
Unmarked C-angle C0.3	Unmarked R angle R0.3		

* For details not marked with a note, please refer to the 3D image file Path:

EH-L36-T5101

Mark	Number of places	Content before change	Content after changes	Sign	Year, Month, Day

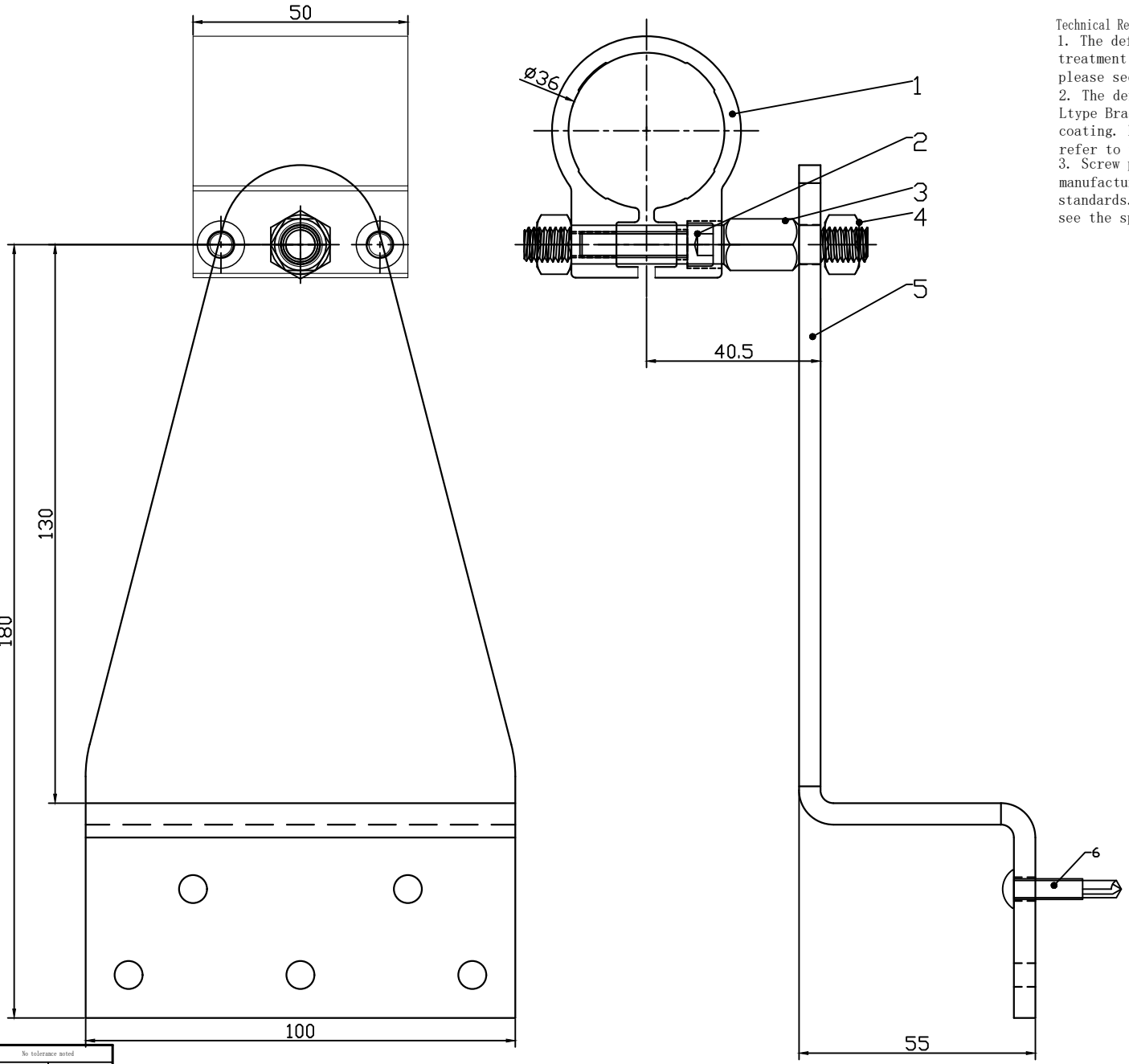

Technical Requirements:
1. The default for hug roundsurface treatment is anodizing. For special cases, please see the specific order details.
2. The default surface treatment for the Ltype Bracket body is outdoor white powder coating. For special requirements, please refer to the specific order.
3. Screw parts and accessories are manufactured according to national standards. For special requirements, please see the specific order details.

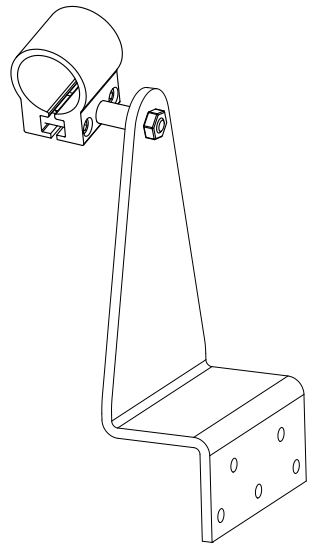

Actual product rendering

Applicable type	L36 Series Electric Screw Window Opener
Applicable window type	Regular types
Installation location	Side mounting at the rear of the fuselage
Maximum push-pull force	2000N
Packaging	Bulk, sealed in plastic bags, either with the motor or individually packaged.

S/No.	Product number	Part name	Specifications and models	quantity	Remark
6	210-0419	screw	Cross-head self-tapping drill bit ST4.8-16×25mm	5	
5	8270-5101121	Bracket	198.5×100×55mm\T51\Zshape	1	Note②
4	211-0803	nut	External hexagonal anti-loosening M8	2	
3	239-0001	connecting bolts	M8×80mm\double threadM8×8	1	
2	210-0606	screw	Hex socket head capM6×25mm	2	
1	8112-0601131	Bracket	Φ36×50mm\hug round	1	Note①

Product name	Bracket	Material		surface treatment			
Product number	9451-5100001	weight	406g	D/No:	EH-L36-T5101		
Specifications and models	EH-L36-T51	Proportion	1:1				
design		Edition	B1	unit	mm	P/No.	/	Projection
Review							
Approve							

No tolerance noted	
X ±0.3	X ±2°
.X ±0.15	.X ±1°
.XX ±0.05	.XX ±0.5°
.XXX ±0.02	
Unmarked C-angle C0.3	Unmarked R angle R0.3

* For details not marked with a note, please refer to the 3D image file Path:

EH-L36-T5201

Mark	Number of places	Content before change	Content after changes	Sign	Year, Month, Day

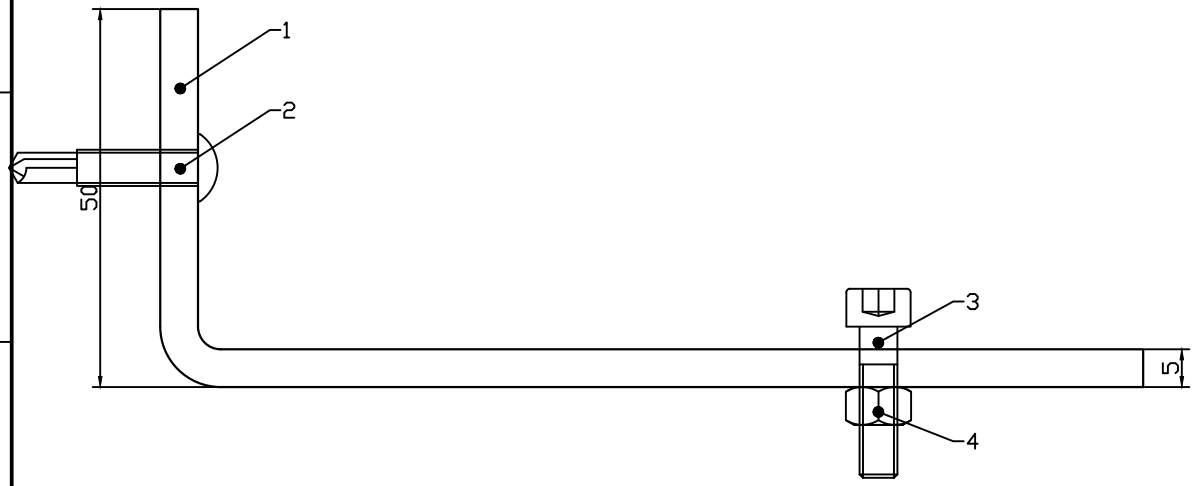

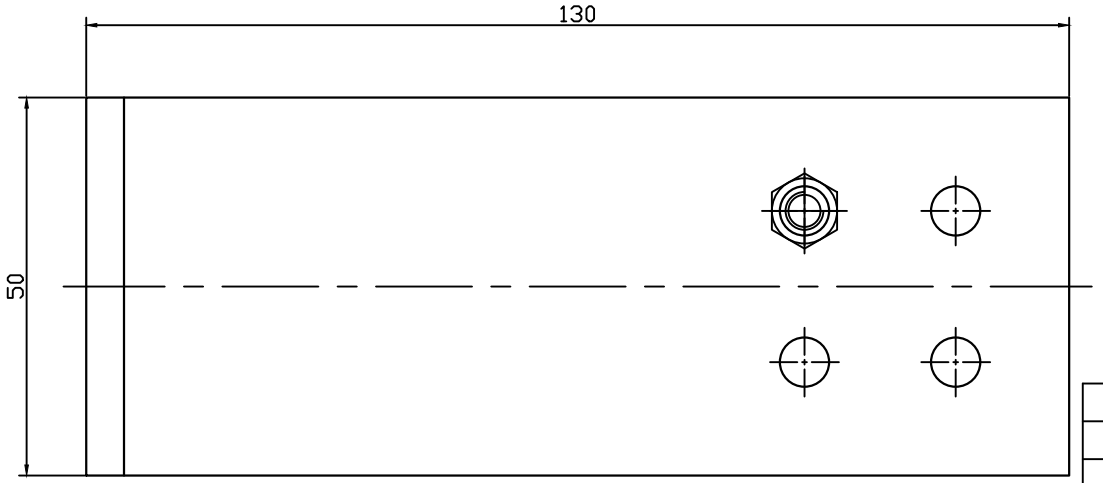

Technical Requirements:

1. The body of the bracket is galvanized by default; for special cases, please see the specific order details.

2. Screws and other accessories conform to national standards; for special requirements, please refer to the specific order.

Actual product rendering

Applicable type	L36 Series Electric Venetian Blind Opener
Applicable window type	Regular types
Installation location	Install on the side of the fuselage
Maximum push-pull force	150ON
Packaging	Bulk, sealed in plastic bags, either with the motor or individually packaged.

S/No.	Product number	Part name	Specifications and models	quantity	Remark
4	211-0501	nut	external hexagon M5	4	
3	210-0506	screw	Hex socket head capM5×20mm	4	
2	210-0419	screw	Cross-head self-tapping drill bit ST4.8-16×25mm	5	
1	8270-5201121	Bracket	50×130×50mm\T=6mm\T52\Lshape	1	Note①

Product name	Bracket	Material		surface treatment	
Product number	9451-5200001	weight	XXg	D/No:	EH-L36-T5201
Specifications and models	EH-L36-T52	Proportion	1:1		
design		Edition	B1	unit: mm P/No. / Projection	
Review		-			
Approve					

No tolerance noted	
X ±0.3	X ±2°
.X ±0.15	.X ±1°
.XX ±0.05	.XX ±0.5°
.XXX ±0.02	
Unmarked C-angle C0.3	Unmarked R angle R0.3

* For details not marked with a note, please refer to the 3D image file Path:

EH-L45-T5401

Mark	Number of places	Content before change	Content after changes	Sign	Year, Month, Day

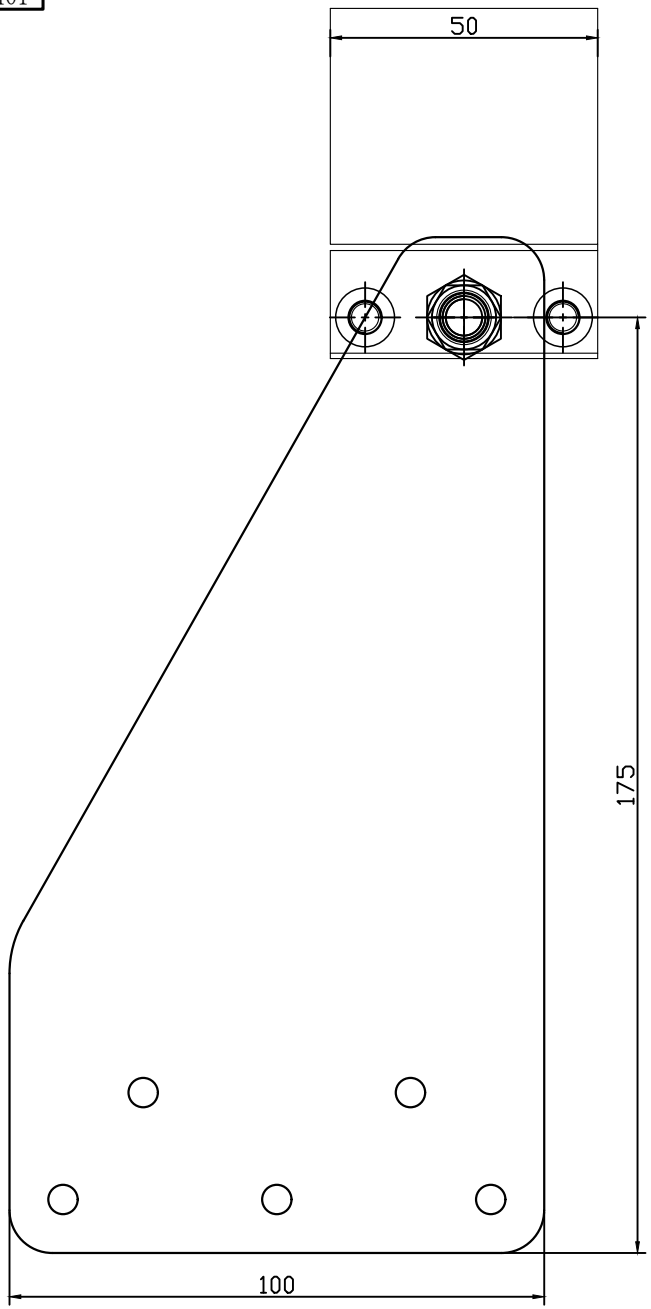

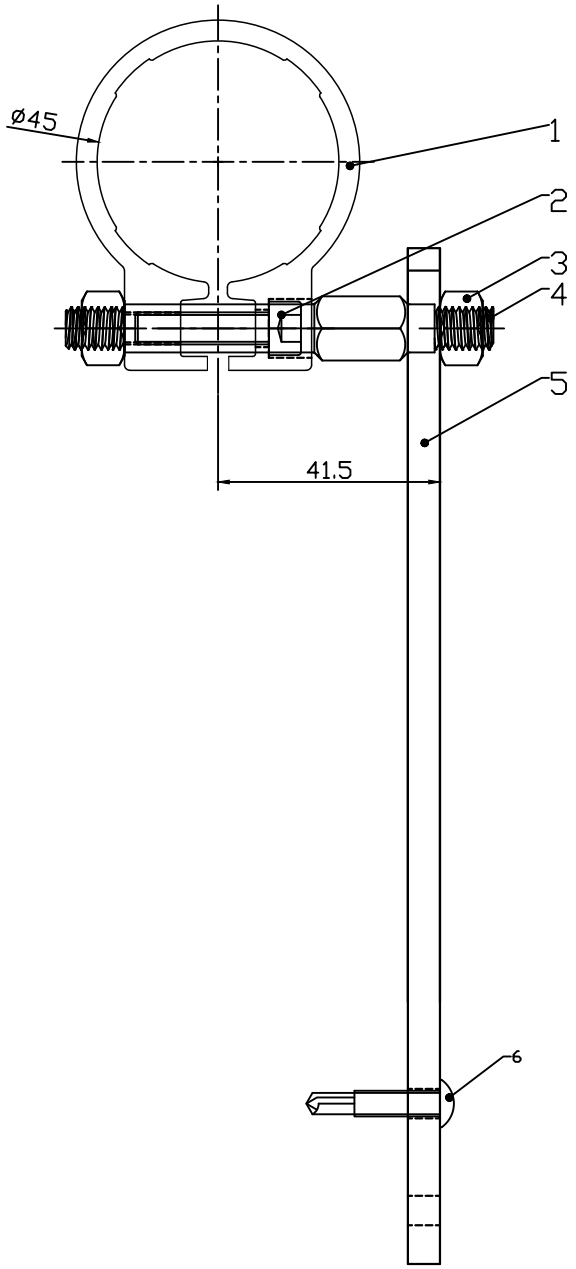

Technical Requirements:

1. The default surface treatment for the Bracket body is galvanized; for special cases, please see the specific order details.
2. The default for hug roundsurface treatment is anodizing. For special cases, please see the specific order details.
3. Screw parts and accessories are manufactured according to national standards. For special requirements, please see the specific order details.

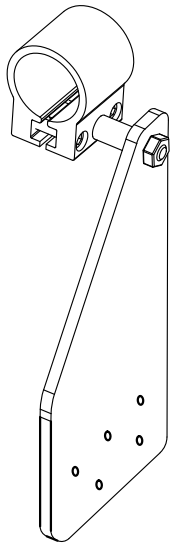

Actual product rendering

Applicable type	L45 Series Electric Screw Window Opener
Applicable window type	Regular types
Installation location	Side mounting at the rear of the fuselage
Maximum push-pull force	2000N
Packaging	Bulk, sealed in plastic bags, either with the motor or individually packaged.

S/No.	Product number	Part name	Specifications and models	quantity	Remark
6	210-0419	screw	Cross-head self-tapping drill bit ST4.8-16×25mm	5	
5	270-5401	Bracket	190×100mm\T54\Straight board	1	
4	211-0803	nut	External hexagonal anti-loosening M8	2	
3	239-0001	connecting bolts	M8×80mm\double threadM8×8	1	
2	210-0606	screw	Hex socket head capM6×25mm	2	
1	8112-0901131	Bracket	Φ45×50mm\hug round	1	Note①

Product name	Bracket	Material		surface treatment	
Product number	9451-5400001	weight	XXXg	D/No:	EH-L45-T5401
Specifications and models	EH-L45-T54	Proportion	1:1		
design		Edition	B1	unit	mm	P/No.	/	Projection	
Review					
Approve					

No tolerance noted	
X ±0.3	X ±2°
.X ±0.15	.X ±1°
.XX ±0.05	.XX ±0.5°
.XXX ±0.02	
Unmarked C-angle C0.3	Unmarked R angle R0.3

* For details not marked with a note, please refer to the 3D image file Path:

EH-L45-T5601

Mark	Number of places	Content before change	Content after changes	Sign	Year, Month, Day

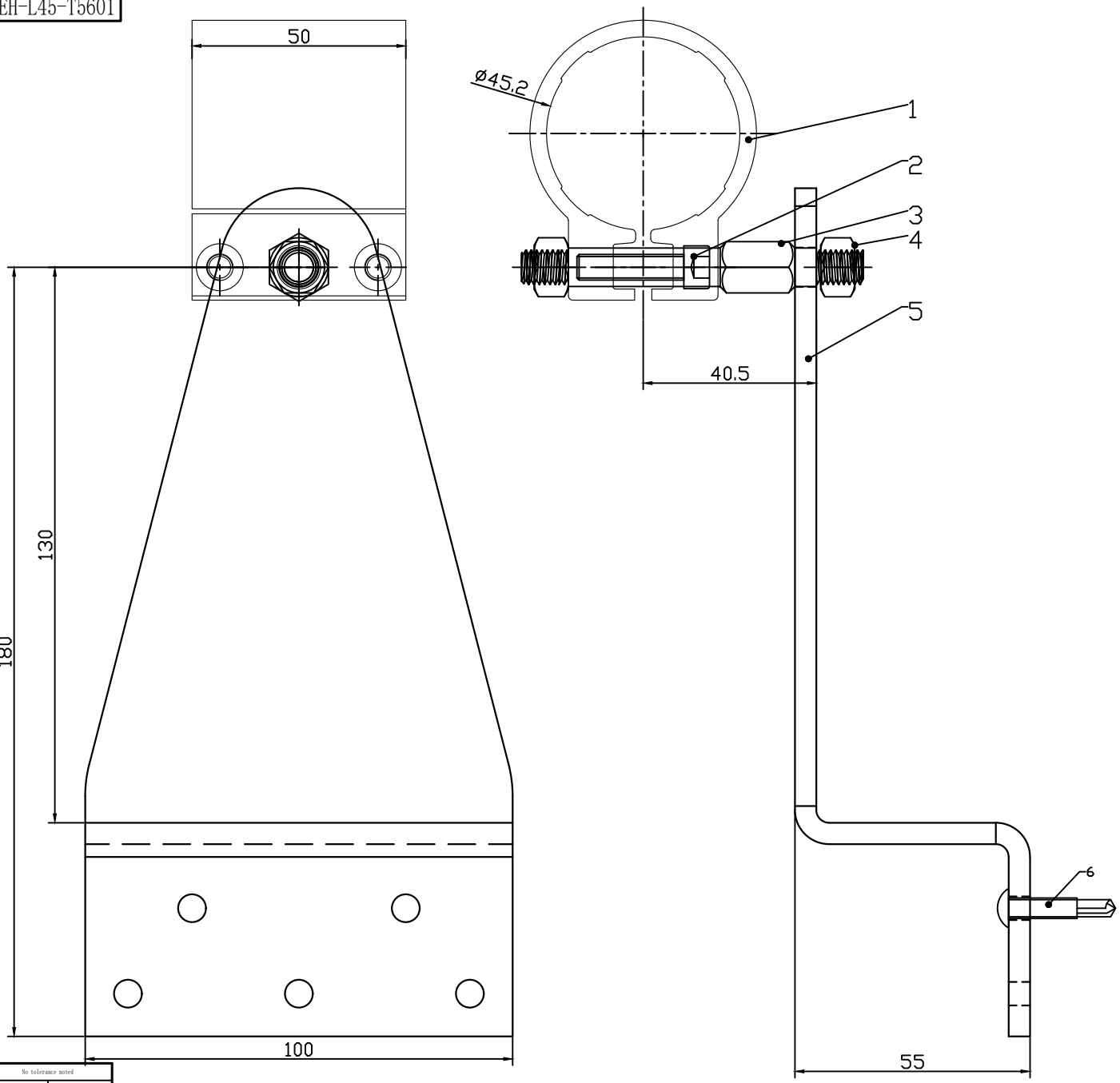

Technical Requirements:
1. The default for hug roundsurface treatment is anodizing. For special cases, please see the specific order details.
2. The default surface treatment for the Ltype Bracket body is outdoor white powder coating. For special requirements, please refer to the specific order.
3. Screw parts and accessories are manufactured according to national standards. For special requirements, please see the specific order details.

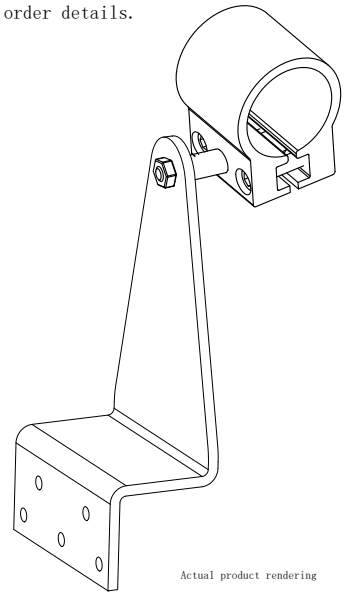

Actual product rendering

Applicable type	L45 Series Electric Screw Window Opener
Applicable window type	Regular types
Installation location	Side mounting at the rear of the fuselage
Maximum push-pull force	2000N
Packaging	Bulk, sealed in plastic bags, either with the motor or individually packaged.

S/No.	Product number	Part name	Specifications and models	quantity	Remark
6	210-0419	screw	Cross-head self-tapping drill bit ST4.8-16×25mm	5	
5	8270-5101121	Bracket	198.5×100×55mm\T51\Zshape	1	Note②
4	211-0803	nut	External hexagonal anti-loosening M8	2	
3	239-0001	connecting bolts	M8×80mm\double threadM8×8	1	
2	210-0606	screw	Hex socket head capM6×25mm	2	
1	8112-0901131	Bracket	Φ45×50mm\hug round	1	Note①

Product name	Bracket	Material		surface treatment			
Product number	9451-5600001	weight	406g	D/No:	EH-L45-T5601		
Specifications and models	EH-L45-T56	Proportion	1:1				
design		Edition	B1	unit	mm	P/No.	/	Projection
Review							
Approve							

No tolerance noted		
X ±0.3	X ±2°	
.X ±0.15	.X ±1°	
.XX ±0.05	.XX ±0.5°	
.XXX ±0.02		
Unmarked C-angle C0.3	Unmarked R angle R0.3	

* For details not marked with a note, please refer to the 3D image file Path:

EH-L36-T5701

Mark	Number of places	Content before change	Content after changes	Sign	Year, Month, Day

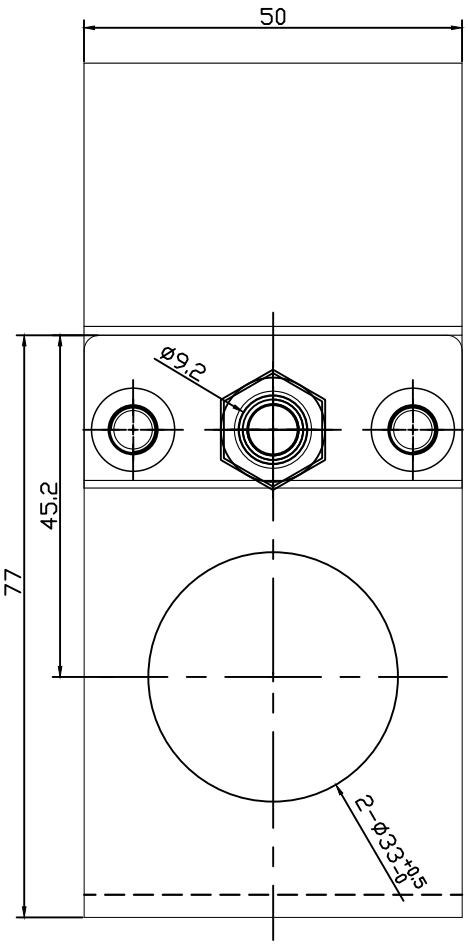

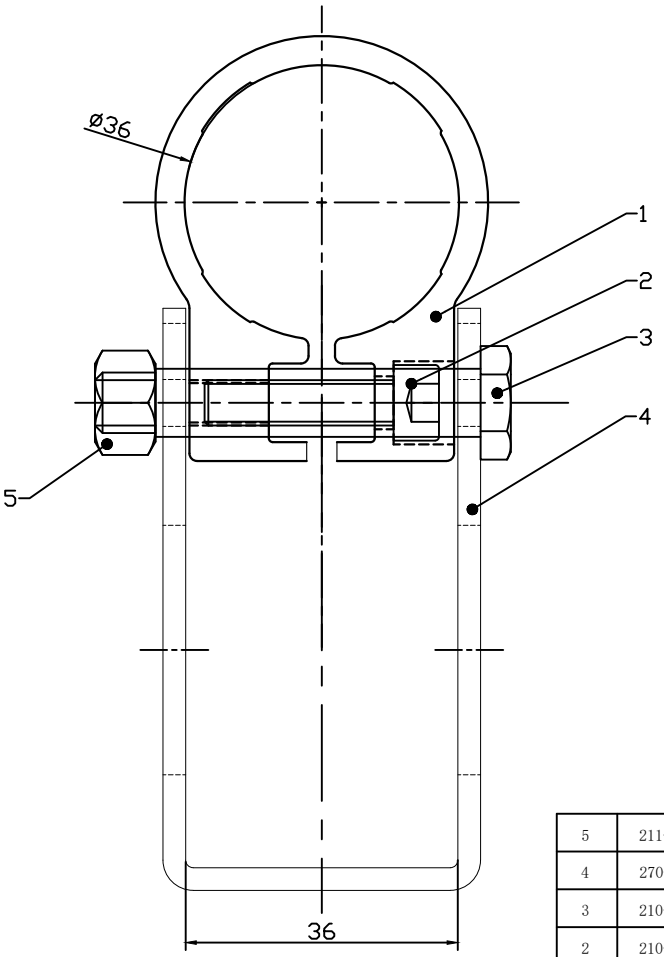

Technical Requirements:

1. The bracket body is blue zinc plated by default, and the hug roundsurface treatment is anodized by default. For special cases, please see the specific order details.
2. Screws and other accessories conform to national standards; for special requirements, please refer to the specific order.

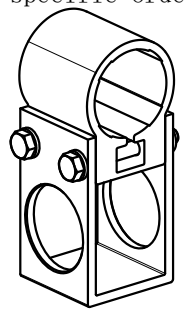

Actual product rendering

Applicable type	L36 Series Electric Screw Window Opener
Applicable window type	Regular types
Installation location	Rear center shaft mounting
Maximum push-pull force	1000N
Packaging	Bulk, sealed in plastic bags, either with the motor or individually packaged.

S/No.	Product number	Part name	Specifications and models	quantity	Remark
5	211-0803	nut	External hexagonal anti-loosening M8	1	
4	270-5701	Bracket	77×50×41mm\T57\Ushape	1	Note①
3	210-0805	screw	External hexagon (half-tooth) φ9×51-(M8×8) mm	1	
2	210-0606	screw	Hex socket head capM6×25mm	2	
1	8112-0601131	Bracket	φ36×50mm\hug round\T6	1	Note①

Product name	Bracket		Material		surface treatment				
Product number	9451-5700001		weight	XXXg	D/No:	EH-L36-T5701			
Specifications and models	EH-L36-T57		Proportion	1:1					
design			Edition	B1	unit	mm	P/No.	/	Projection
Review			-						
Approve									

No tolerance noted	
X ±0.3	X ±2°
.X ±0.15	.X ±1°
.XX ±0.05	.XX ±0.5°
.XXX ±0.02	
Unmarked C-angle C0.3	Unmarked R angle R0.3

* For details not marked with a note, please refer to the 3D image file Path:

EH-L36-T5501

Mark	Number of places	Content before change	Content after changes	Sign	Year, Month, Day

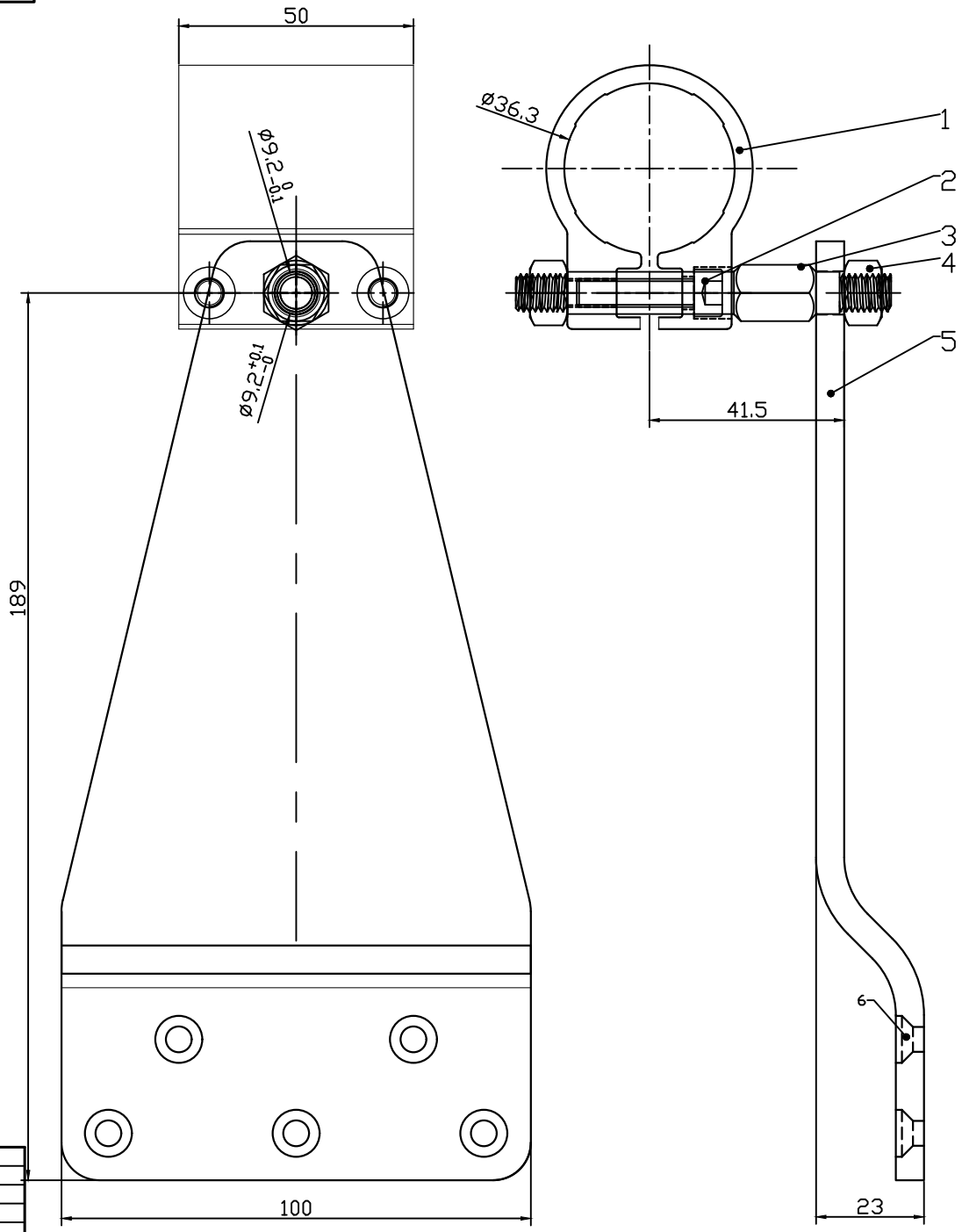

Technical Requirements:

1. Bracket body and hug round surface treatment are anodized by default. See details for specific requirements. Order;

2. Screws and other accessories conform to national standards; for special requirements, please refer to the specific order.

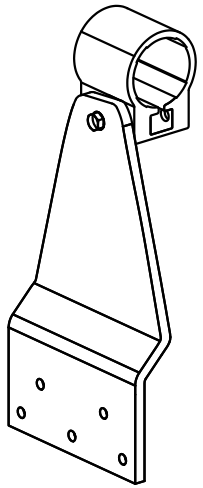

Actual product rendering

Applicable type	L36 Series Electric Screw Window Opener
Applicable window type	Regular types
Installation location	Side mounting at the rear of the fuselage
Maximum push-pull force	1000N
Packaging	Bulk, sealed in plastic bags, either with the motor or individually packaged.

S/No.	Product number	Part name	Specifications and models	quantity	Remark
6	210-0418	screw	Cross-head countersunk drill bit self-tapping ST4.8-16×25mm	5	
5	8270-5801131	Bracket	200×100×23mm\T58\Zshape	1	Note①
4	211-0803	nut	External hexagonal anti-loosening M8	2	
3	239-0001	connecting bolts	M8×80mm\double threadM8×8	1	
2	210-0606	screw	Hex socket head capM6×25mm	2	
1	8112-0601131	Bracket	Φ36×50mm\hug round	1	Note①

Product name	Bracket	Material		surface treatment				
Product number	9451-5300001	weight	406g	D/No:	EH-L36-T5501			
Specifications and models	EH-L36-T55	Proportion	1:1					
design		Edition	B1	unit	mm	P/No.	/	Projection
Review								
Approve								

No tolerance noted	
X ±0.3	X ±2°
.X ±0.15	.X ±1°
.XX ±0.05	.XX ±0.5°
.XXX ±0.02	
Unmarked C-angle C0.3	Unmarked R angle R0.3

* For details not marked with a note, please refer to the 3D image file Path:

EH-L36-T5901

Mark	Number of places	Content before change	Content after changes	Sign	Year, Month, Day

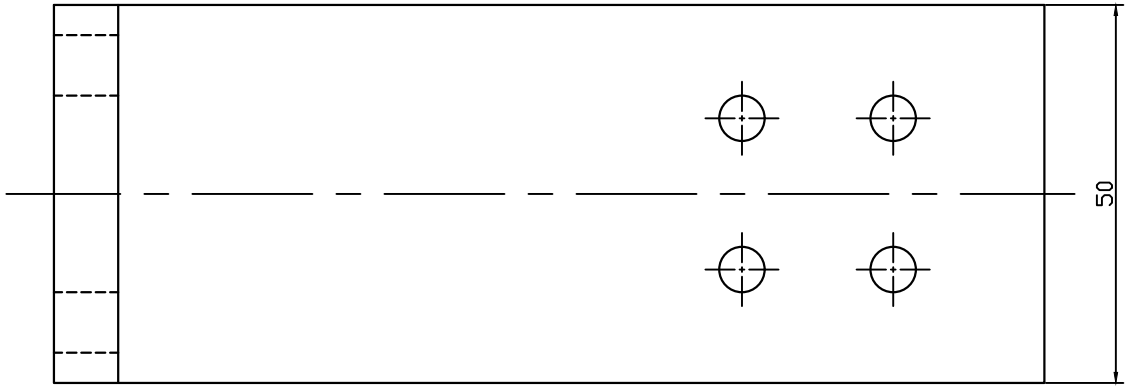

Technical Requirements:

1. The Bracket body is sandblasted and anodized by default. For special orders, please see the specific order details.

2. Screws and other accessories conform to national standards; for special requirements, please refer to the specific order.

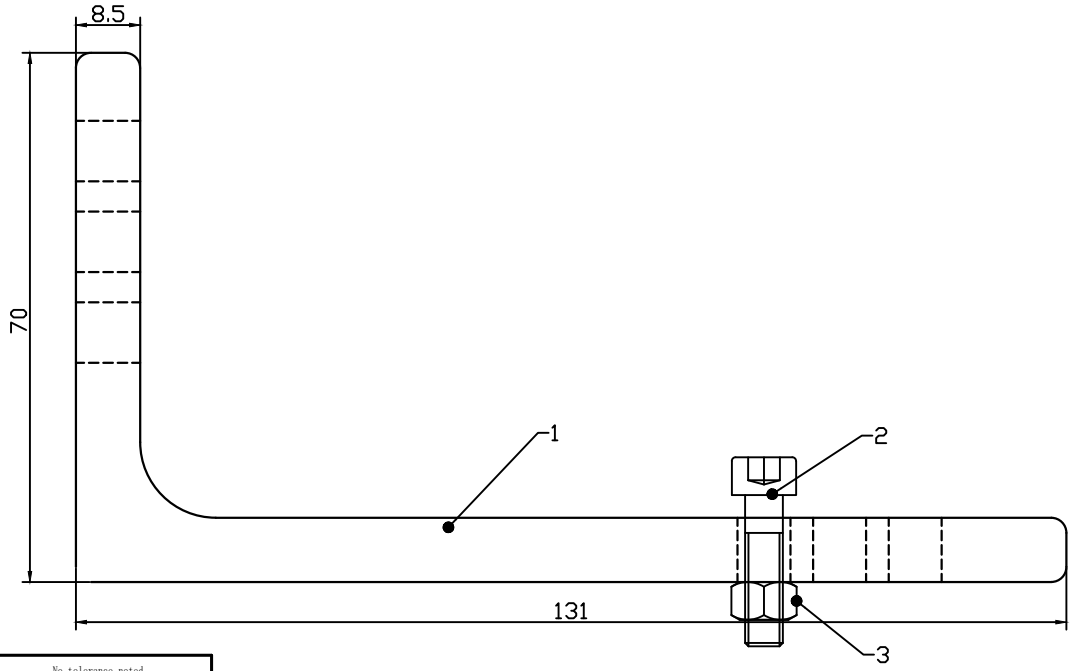

Actual product rendering

Applicable type	Electric screw window opener L36/L45 series
Applicable window type	Regular types
Installation location	Install on the side of the fuselage
Maximum push-pull force	1500N
Packaging	Bulk, sealed in plastic bags, either with the motor or individually packaged.

S/No.	Product number	Part name	Specifications and models	quantity	Remark
3	211-0501	nut	external hexagon M5	4	
2	210-0506	screw	Hex socket head capM5×20mm	4	
1	270-0604	Bracket	70×131×50mm\8.5mm\T59\Lshape	1	Note①

Product name	Bracket	Material		surface treatment	
Product number	9451-5900001	weight	XXg	D/No:	EH-L36-T5901
Specifications and models	EH-L36-T59	Proportion	1:1		
design		Edition	B1	unit: mm; P/No.: /; Projection	
Review					
Approve					

No tolerance noted		
X ±0.3	X ±2°	
.X ±0.15	.X ±1°	
.XX ±0.05	.XX ±0.5°	
.XXX ±0.02		
Unmarked C-angle C0.3	Unmarked R angle R0.3	

* For details not marked with a note, please refer to the 3D image file Path: